Appendix C - Alternative Concept Plans

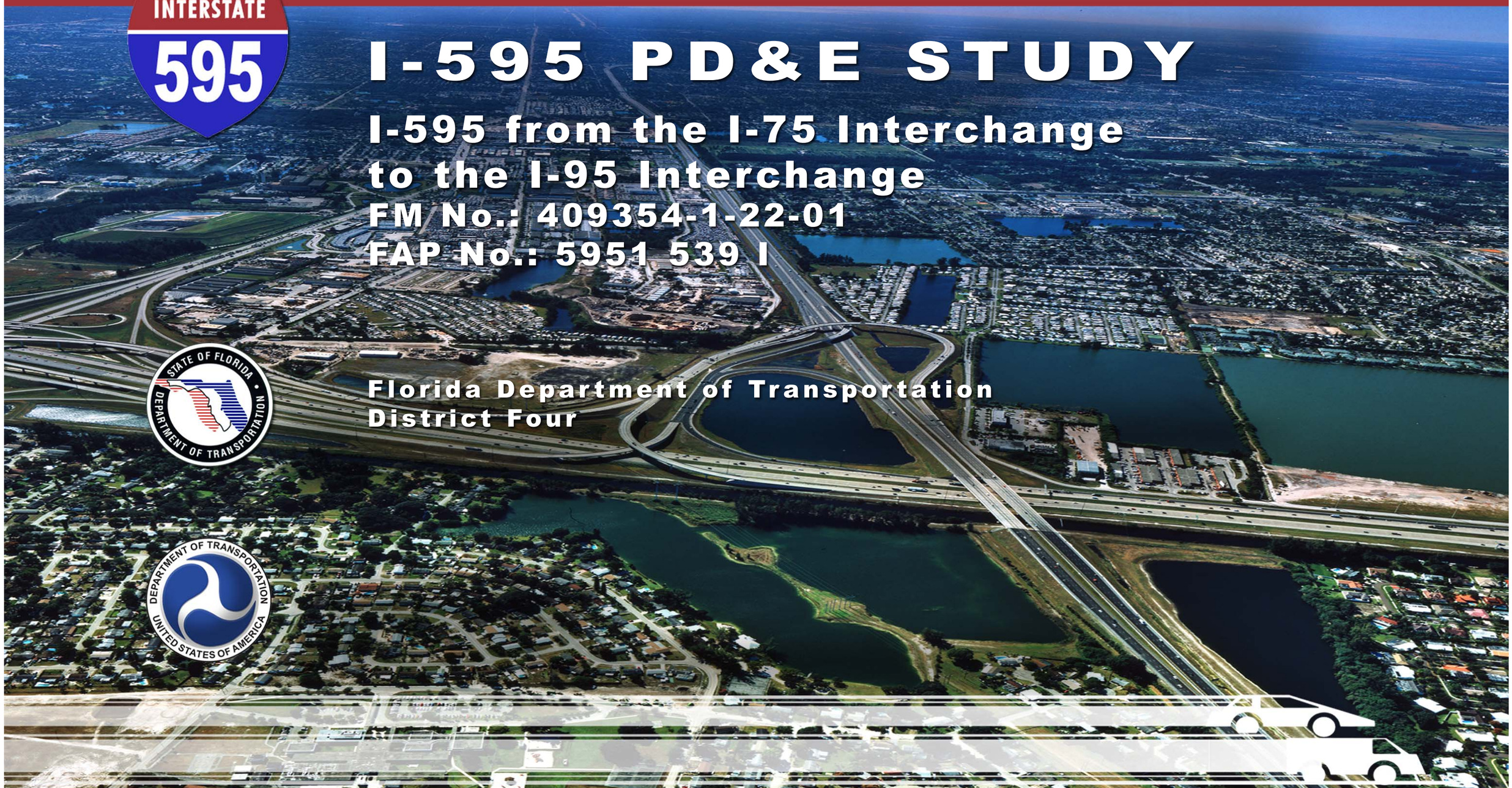

I-595 PD&E STUDY

I-595 from the I-75 Interchange to the I-95 Interchange

FM No.: 409354-1-22-01
FAP No.: 5951 539 I

Florida Department of Transportation
District Four

STATE OF FLORIDA
DEPARTMENT OF TRANSPORTATION

ALTERNATIVE CONCEPT PLANS

FINANCIAL PROJECT ID 409354-1-22-01
(FEDERAL FUNDS)
BROWARD COUNTY (86095)
STATE ROAD NO. 862

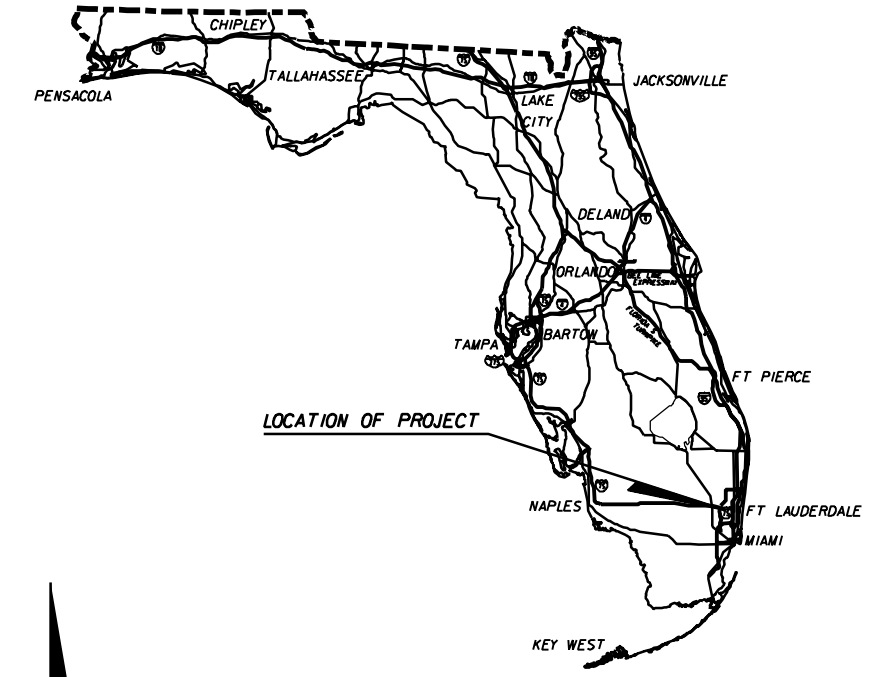

INDEX OF PRELIMINARY CONCEPT PLANS

SHEET NO.	SHEET DESCRIPTION
1	KEY SHEET
N/A	CONCEPT TYPICAL SECTIONS
N/A	DESIGN EXCEPTIONS AND VARIATIONS
2-15	ALTERNATIVES 1A & 1B TYPICAL SECTIONS
16-30	ALTERNATIVES 2A TYPICAL SECTIONS
31-45	ALTERNATIVES 2B TYPICAL SECTIONS
46-60	ALTERNATIVE 1A PLAN SHEETS
61-75	ALTERNATIVE 1B PLAN SHEETS
76-90	ALTERNATIVE 2A PLAN SHEETS
91-105	ALTERNATIVE 2B PLAN SHEETS
106-108	ALTERNATIVE 2A DIRECT CONNECT OPTIONS

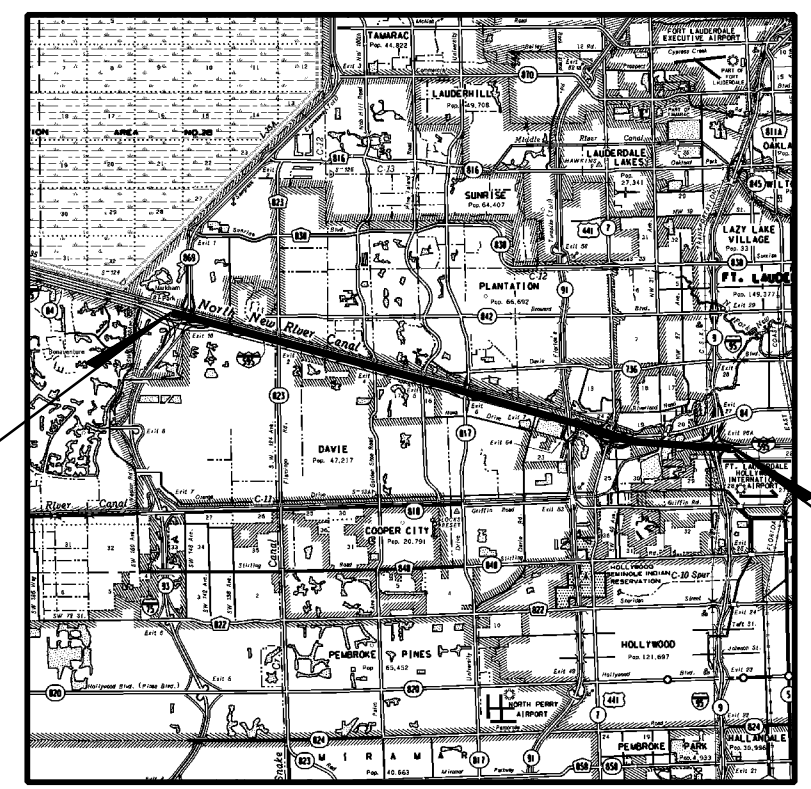

BEGIN PROJECT
MP 0.592
SECTION 86075045

END PROJECT
MP 10.407
SECTION 86095000

N

0 2 4
Miles

GOVERNING STANDARDS AND SPECIFICATIONS:
FLORIDA DEPARTMENT OF TRANSPORTATION,
DESIGN STANDARDS DATED JANUARY 2006,
AND STANDARD SPECIFICATIONS FOR ROAD AND
BRIDGE CONSTRUCTION DATED 2006,
AS AMENDED BY CONTRACT DOCUMENTS.

APPLICABLE DESIGN STANDARDS MODIFICATIONS:

For Design Standards Modifications click on
"Design Standards" of the following web site:
http://www.dot.state.fl.us/rddesign/

PLANS PREPARED BY:

REYNOLDS, SMITH AND HILLS, INC.
300 SOUTH PINE ISLAND ROAD, SUITE 300
PLANTATION, FLORIDA 33324-2619
TEL (954) 474-3005
FAX (954) 474-1304
CONTRACT NO.: C-8627
VENDOR NO. VF-592986466-001
FL. CERT. NO. EB0005620

NOTE: THE SCALE OF THESE PLANS MAY
HAVE CHANGED DUE TO REPRODUCTION.

PRELIMINARY
SUBJECT TO CHANGE
FEBRUARY 13, 2005

PROJECT LENGTH IS BASED ON ℄ OF CONSTRUCTION

LENGTH OF PROJECT		
	LINEAR FEET	MILES
ROADWAY	0.00	0.000
BRIDGES	0.00	0.000
NET LENGTH OF PROJECT	51.823.20	9.815
EXCEPTIONS	0.00	0.000
GROSS LENGTH OF PROJECT	51,823.20	9.815

FDOT PROJECT MANAGER: STEVEN BRAUN, P.E.

KEY SHEET REVISIONS		
DATE	BY	DESCRIPTION

ROADWAY PLANS
ENGINEER OF RECORD: _____

P.E. NO.: _____

FISCAL YEAR	SHEET NO.
	1

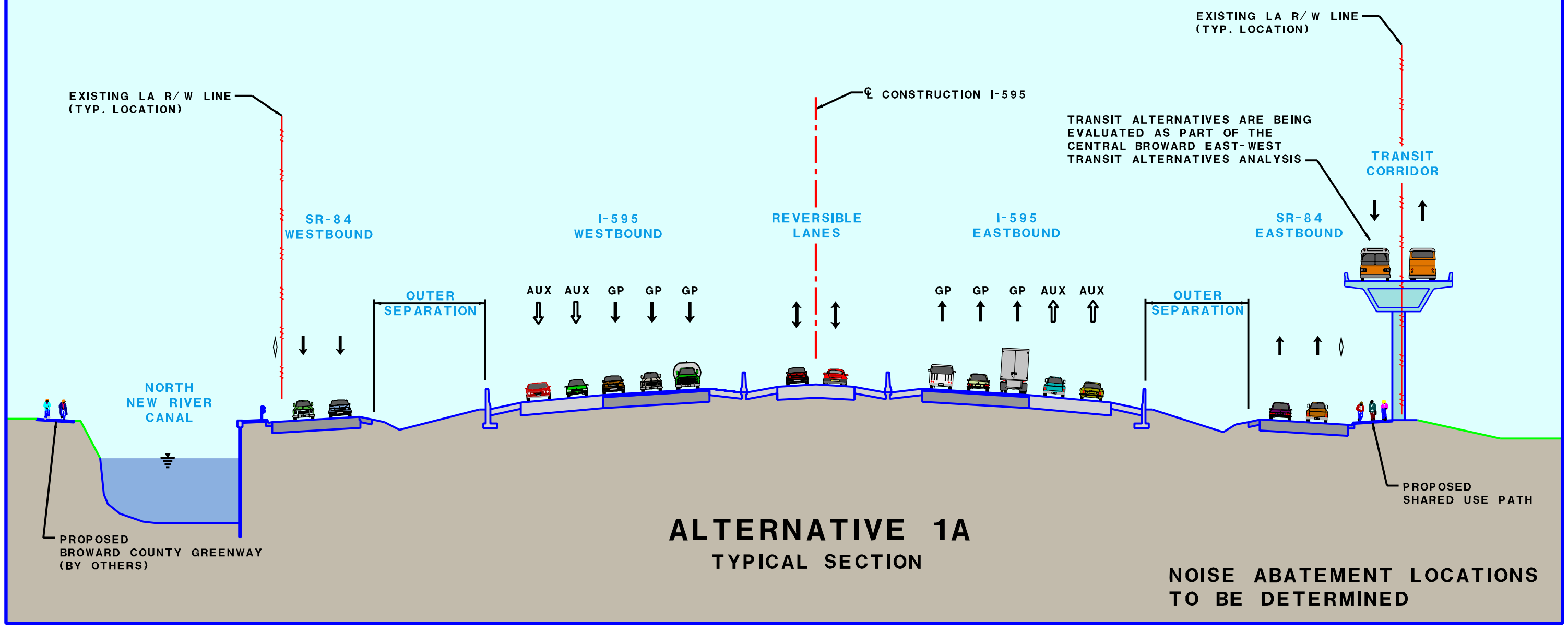

I-595 CORRIDOR
ALTERNATIVE 1A CONCEPT TYPICAL

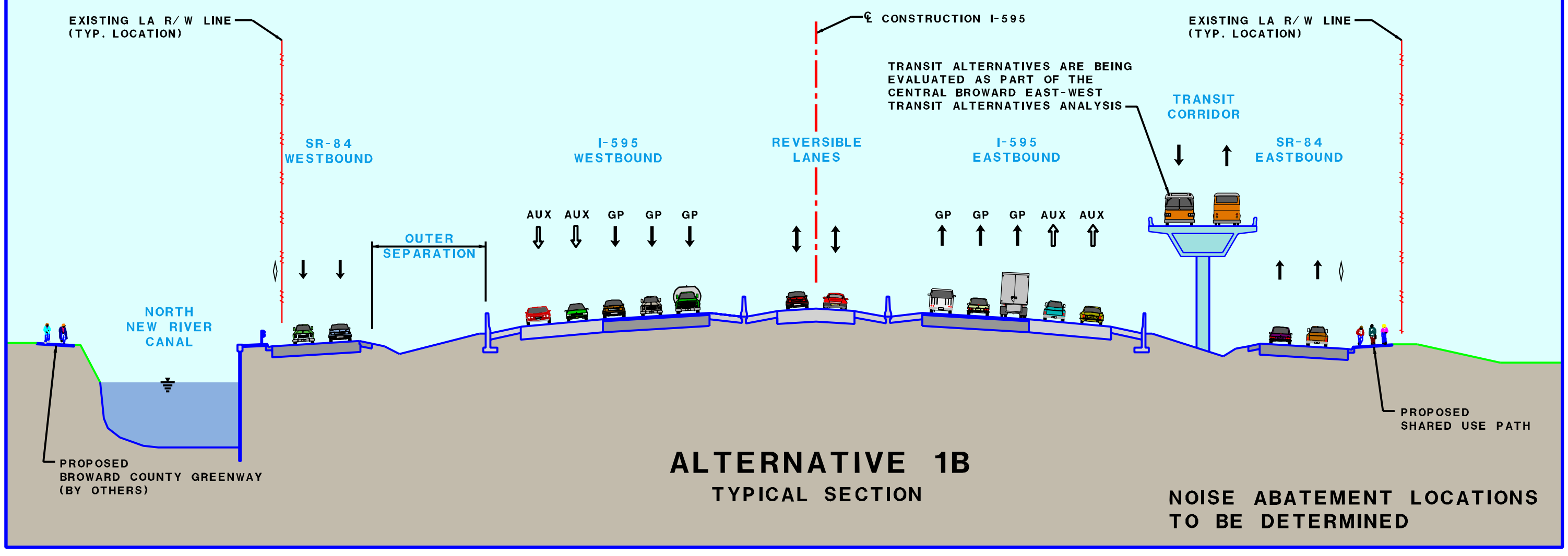

I-595 CORRIDOR
ALTERNATIVE 1B CONCEPT TYPICAL

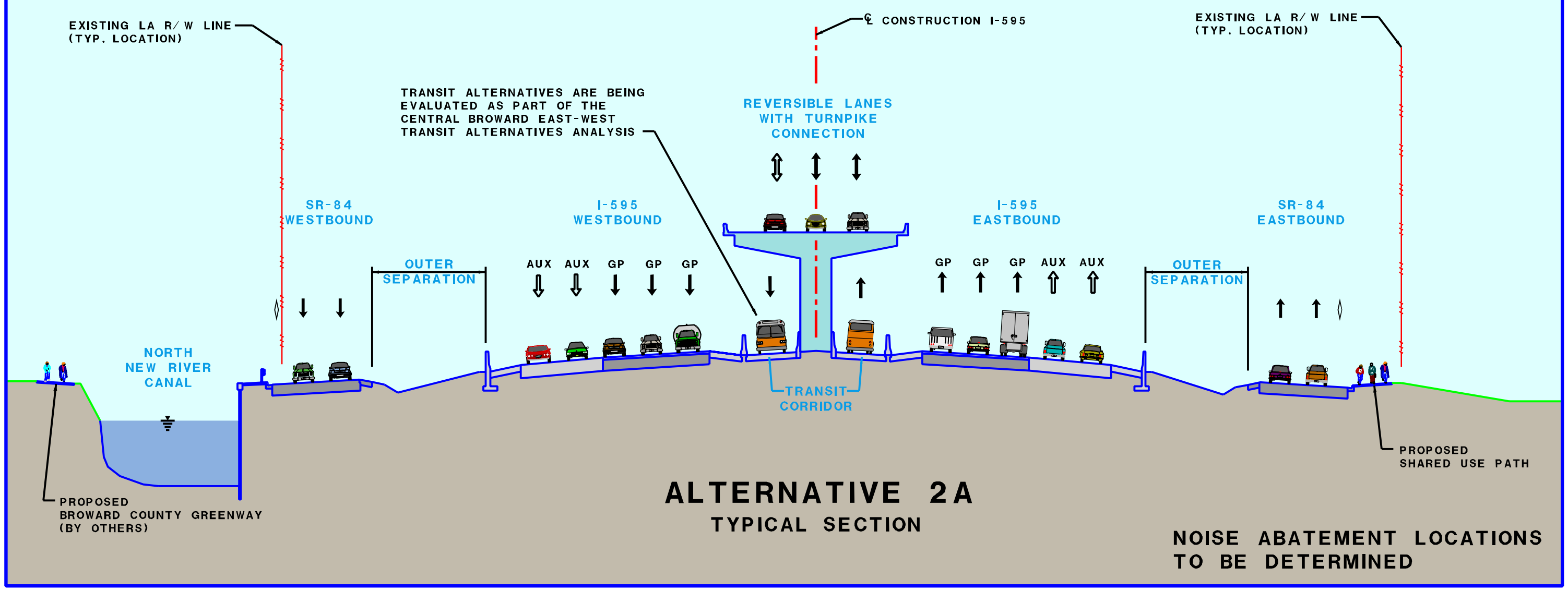

I-595 CORRIDOR
ALTERNATIVE 2A CONCEPT TYPICAL

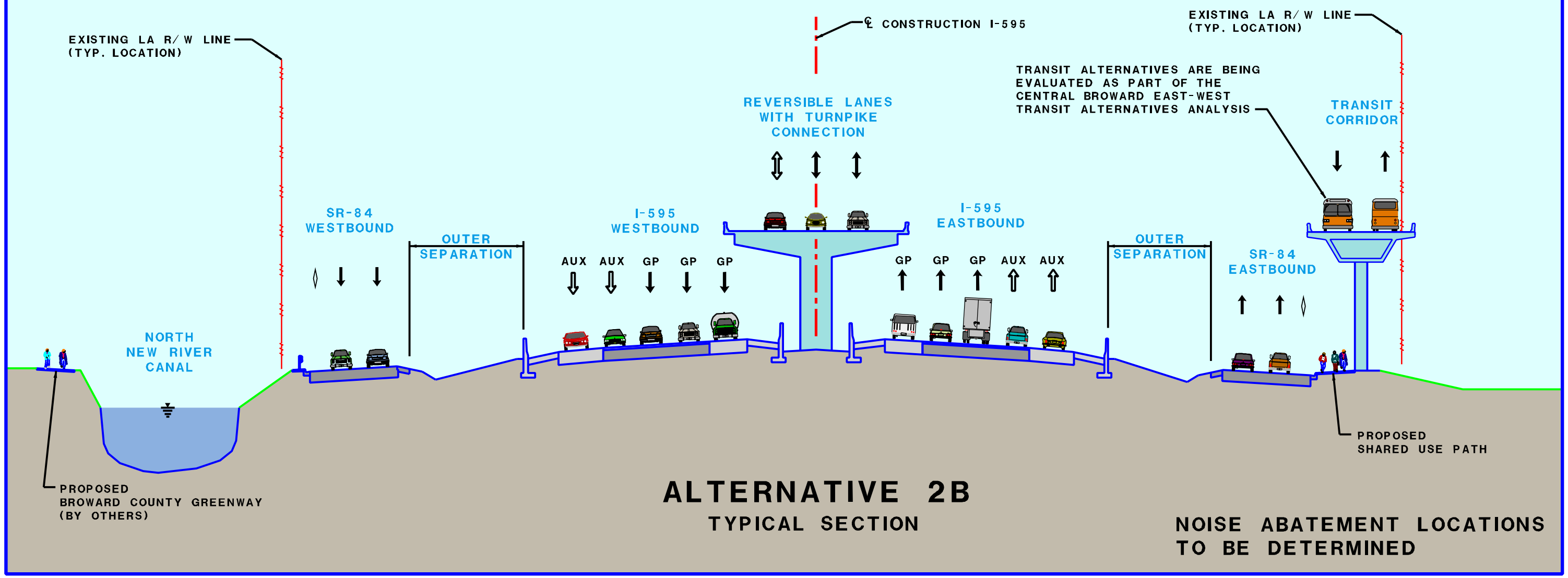

I-595 CORRIDOR
ALTERNATIVE 2B CONCEPT TYPICAL

Design Exceptions and Variations Summary

Critical Elements (13 Controlling Items)									
		Design Exception				Design Variation			
	Design Element	Mainline	Reversible	Ramps	SR-84	Mainline	Reversible	Ramps	SR-84
1	Design Speed	S/S	S/S	S/S	S/S	S/S	S/S	S/S	S/S
2	Lane Width	S/S	S/S	S/S	S/S	S/S	S/S	S/S	S/S
3	Shoulder Width *	R/R	R/R	R/R	R/R	R/R	R/R	R/R	R/R
4	Bridge Width *	S/S	S/S	R/R	S/S	S/S	S/S	R/R	S/S
5	Structural Capacity	S/S	S/S	S/S	S/S	S/S	S/S	S/S	S/S
6	Vertical Clearance *	R/R	S/S	S/S	S/S	R/R	S/S	S/S	S/S
7	Grades	S/S	S/S	S/S	S/S	S/S	S/S	S/S	S/S
8	Cross Slopes *	S/S	S/S	S/S	S/S	R/R	S/S	S/S	S/S
9	Superelevation	S/S	S/S	S/S	S/S	S/S	S/S	S/S	S/S
10	Horizontal Alignment	S/S	S/S	S/S	S/S	S/S	S/S	S/S	S/S
11	Vertical Alignment	S/S	S/S	S/S	S/S	S/S	S/S	S/S	S/S
12	Stopping Sight Distance	S/S	S/S	S/S	S/S	S/S	S/S	S/S	S/S
13	Horizontal Clearance	S/S	S/S	S/S	S/S	S/S	S/S	S/S	S/S
Other Design Elements									
		Design Exception				Design Variation			
14	Border Width *	N/A	N/A	N/A	N/A	R/R	R/R	R/R	R/R
15	Median Width *	N/A	N/A	N/A	N/A	R/R	R/R	N/A	N/A
16	Length of Horizontal Curve *	N/A	N/A	N/A	N/A	S/S	S/S	R/R	R/R
17	Length of Vertical Curve	N/A	N/A	N/A	N/A	S/S	S/S	S/S	S/S

Notes: S = Design Criteria Satisfied, R = Exception/Variation Required
Example: S/S = Alt. 1B Satisfied / Alt. 2A Satisfied
X/X = LPA Alternative 1B / LPA Alternative 2A

** See additional tables for details*

Shoulder Width

Facility	Side	Approximate Station Range	Proposed Width (ft)	Criteria Width (ft)
WB SR-84	Outside	1230+20 to 1235+35	6	10
WB SR-84	Inside	1230+20 to 1236+90	6	8 *
WB I-595 to Flamingo Rd. Exit Ramp	Outside	1257+60 to 1266+60	6	10
Hiatus Rd. to WB I- 595 Entrance Ramp	Outside	1263+30 to 1255+80	6	10
Hiatus Rd. to WB I- 595 Entrance Ramp	Inside	1257+90 to 1264+60	6	8 *
EB I-595 to Pine Island Rd. Exit Ramp	Outside	132 2+80 to 1335+80	6	10
EB I-595 to Pine Island Rd. Exit Ramp	Inside	1333+10 to 1335+80	6	10
Pine Island to WB I- 595 Entrance Ramp	Outside	1364+05 to 1372+50	6	10
Pine Island to WB I- 595 Entrance Ramp	Inside	1364+05 to 1372+50	6	8 *
WB I-595 to Pine Island Exit Ramp	Outside	411+90 to 425+90	6	10
WB I-595 to Pine Island Exit Ramp	Inside	496+40 to 506+45	6	10
WB I-595	Outside	554+45 to 562+25	4	10
Reversible Lanes	South	555+00 to 559+75	6	10
EB I-595	Inside	542+00 to 545+00	6	10
EB I-595	Inside	555+00 t o 565+15	5	10
EB I-595	Outside	535+35 to 562+60	6	10
WB SR-84	Outside	550+00 to 560+00	4	10
EB I-595	Inside	607+683+95	3	10

Note: PPM Volume 1 Table 2.3.1 - 8' total width, 4' paved

Bridge Width

LOCATION	AASHTO	PPM	ACTUAL
Pine Island Road EB 2 lane off-ramp	43 ft.	43 ft.	39 ft.
Nob Hill Road WB 2 lane off-ramp	43 ft.	43 ft.	39 ft.

Vertical Clearance

Location	Bridge Number	Existing Clearance (ft)	Proposed Clearance (ft)	AASHTO Criteria Clearance (ft)	PPM Criteria Clearance (ft)	Reason
Flamingo Rd.	860368 and 860369	16.42	15.67	16.0	16.5	Widen I-595
Hiatus Rd.	860370 and 860371	16.42	15.79	16.0	16.5	Widen I-595
Nob Hill Rd.	860359 and 860360	16.83	16.27	16.0	16.5	Widen I-595
Pine Island Rd.	860357 and 860358	15.99	15.41	16.0	16.5	Widen I-595
University Dr.	860392	16.75	16.34	16.0	16.5	Widen I-595
Davie Rd.	860378 and 860379	16.42	16.3	16.0	16.5	Widen I-595
SR-84 @ I-595 EB	860425	17.02	16.3	16.0	16.5	Widen I-595
SR-84 @ I-595 WB	860426	16.58	15.5	16.0	16.5	Widen I-595
FLA Turnpike NB	860533	16.54	16.5	16.0	16.5	Widen I-595

Cross Slopes

LOCATION	AASHTO	PPM	ACTUAL
Mainline I-595	.015 to .025	2 lanes max. @ 0.02	3 lanes @ 0.02 (variation)

Border Width

LOCATION	PPM	ACTUAL
Freeway Border width throughout the corridor with Flush Shoulder	94 ft.	Varies
Arterial >45 mph border width throughout the corridor with Flush Shoulder	33 ft.	Varies

Median Width

LOCATION	PPM	ACTUAL
I-595 Eastbound between Reversible lane and mainline lanes LPA Alternative 1B - entire length of Reversible lanes along I-595 LPA Alternative 2A - only in reversible lane interchange areas on I-595	24 ft.	22 ft.
I-595 Westbound between Reversible lane and mainline lanes LPA Alternative 1B - entire length of Reversible lanes along I-595 LPA Alternative 2A - only in reversible lane interchange areas on I-595	24 ft.	22 ft.

Length of Horizontal Curve

LOCATION	PPM	ACTUAL
Flamingo Road WB off-ramp	400 ft.	358 ft.
Hiatus Road WB off-ramp	400 ft.	313 ft.
Nob Hill Road EB on-ramp	400 ft.	195 ft.
Pine Island Road EB off-ramp	400 ft.	315 ft.
Nob Hill Road WB off-ramp	400 ft.	331 ft.
Pine Island Road EB Bypass Ramp	400 ft.	264 ft.
SR-84 Eastbound @ Pine Island Road EB bypass ramp gore	400 ft.	345 ft.
SR-84 Westbound @ Sewell Lock Park	400 ft.	357 ft.
SR-84 Westbound @ Nob Hill off-ramp braid	400 ft.	259 ft.

I-595 CORRIDOR DESIGN EXCEPTIONS AND VARIATIONS

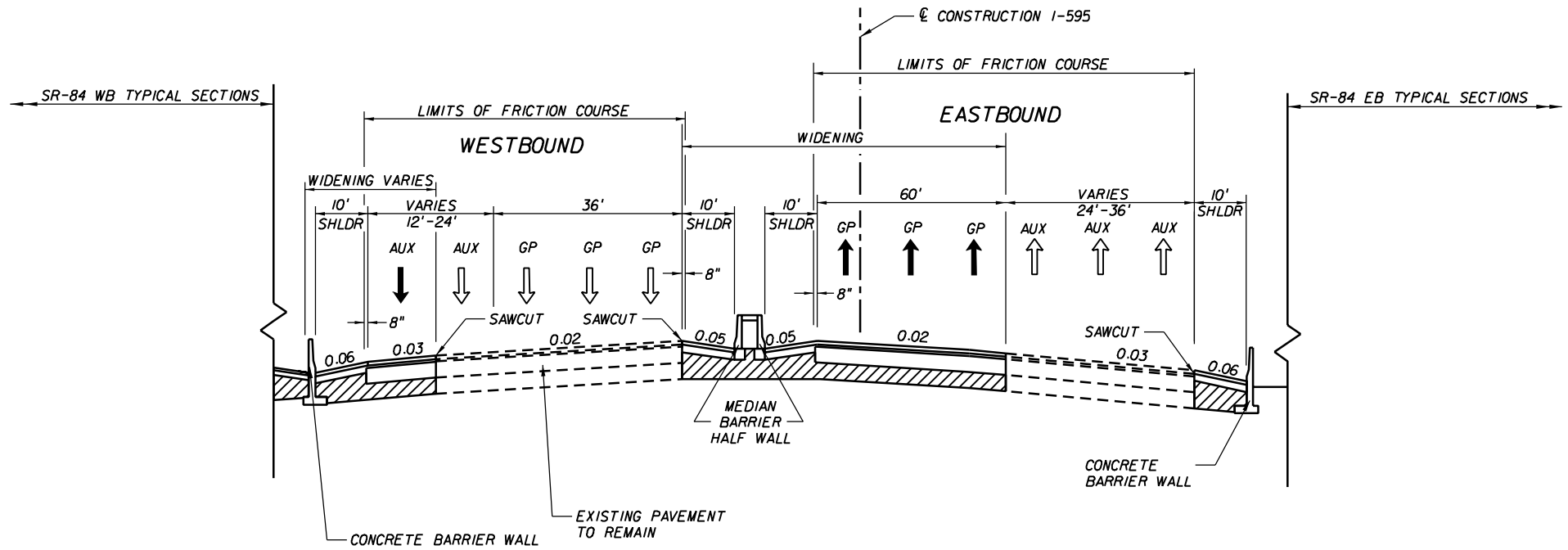

I-595 (SR-862) ALTERNATIVES IA, IB, 2A, 2B
NO FILL SECTION
FROM SR-7 TO VIADUCT OVER POND APPLE SLOUGH

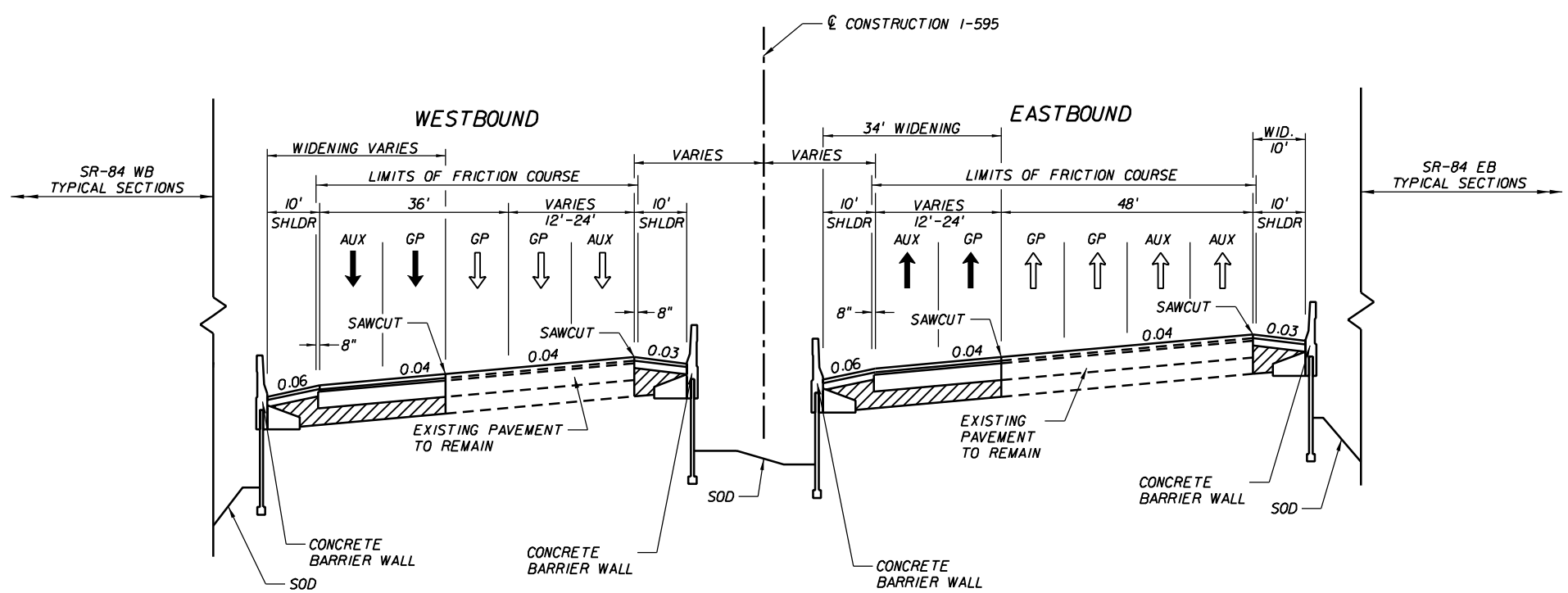

I-595 (SR-862) ALTERNATIVES IA, IB, 2A, 2B
SUPERELEVATED SECTION
AT SR-7

REVISIONS					
DATE	BY	DESCRIPTION	DATE	BY	DESCRIPTION

RS&H
Reynolds, Smith and Hills, Inc.
300 S. Pine Island Road, Suite 300
Plantation, Florida 33324-2619
954-474-3005
FL Cert. No. EB0005620
Phil Schwab, P.E. No. 47555

STATE OF FLORIDA
DEPARTMENT OF TRANSPORTATION

ROAD NO.	COUNTY	FINANCIAL PROJECT ID
862	BROWARD	409354-1-22-01

ALTERNATIVES 1A & 1B TYPICAL SECTIONS

SHEET NO. 2

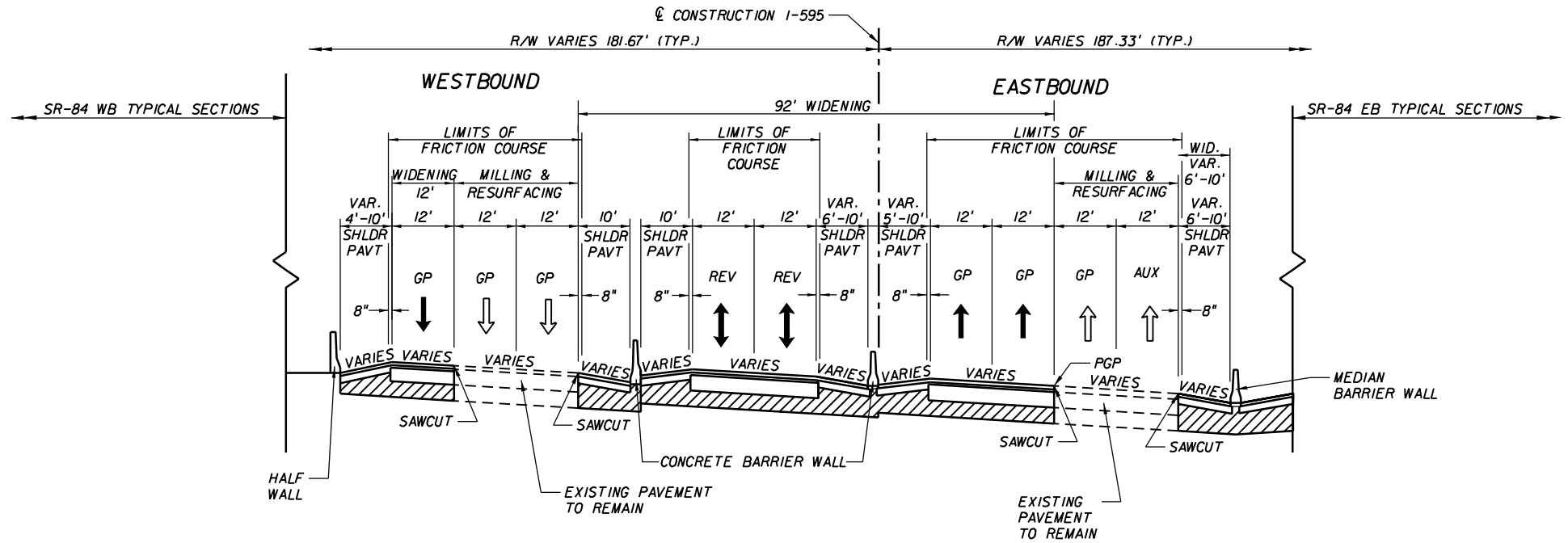

I-595 (SR-862) ALTERNATIVES IA & IB
SUPERELEVATED SECTION
AT FLORIDA'S TURNPIKE

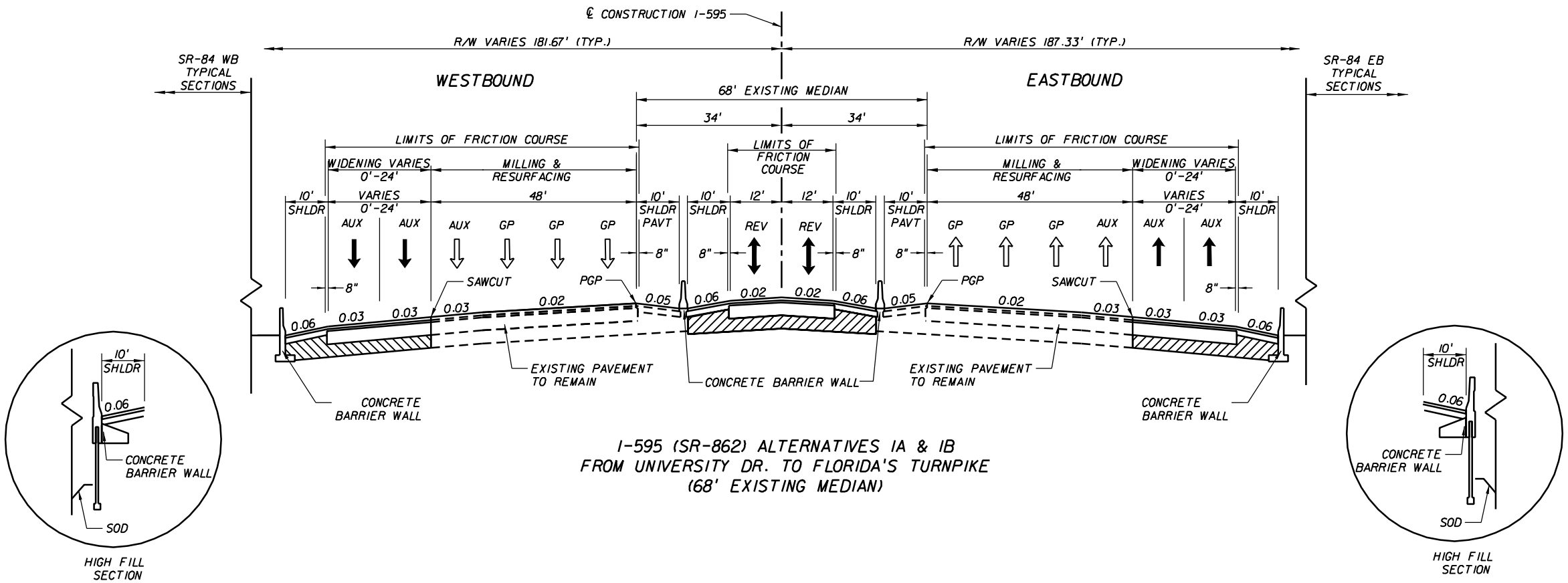

I-595 (SR-862) ALTERNATIVES IA & IB
FROM UNIVERSITY DR. TO FLORIDA'S TURNPIKE
(68' EXISTING MEDIAN)

REVISIONS					
DATE	BY	DESCRIPTION	DATE	BY	DESCRIPTION

RS&H
Reynolds, Smith and Hills, Inc.
300 S. Pine Island Road, Suite 300
Plantation, Florida 33324-2619
954-474-3005
FL Cert. No. EB0005620
Phil Schwab, P.E. No. 47555

STATE OF FLORIDA
DEPARTMENT OF TRANSPORTATION

ROAD NO.	COUNTY	FINANCIAL PROJECT ID
862	BROWARD	409354-1-22-01

ALTERNATIVES 1A & 1B TYPICAL SECTIONS

SHEET NO. 3

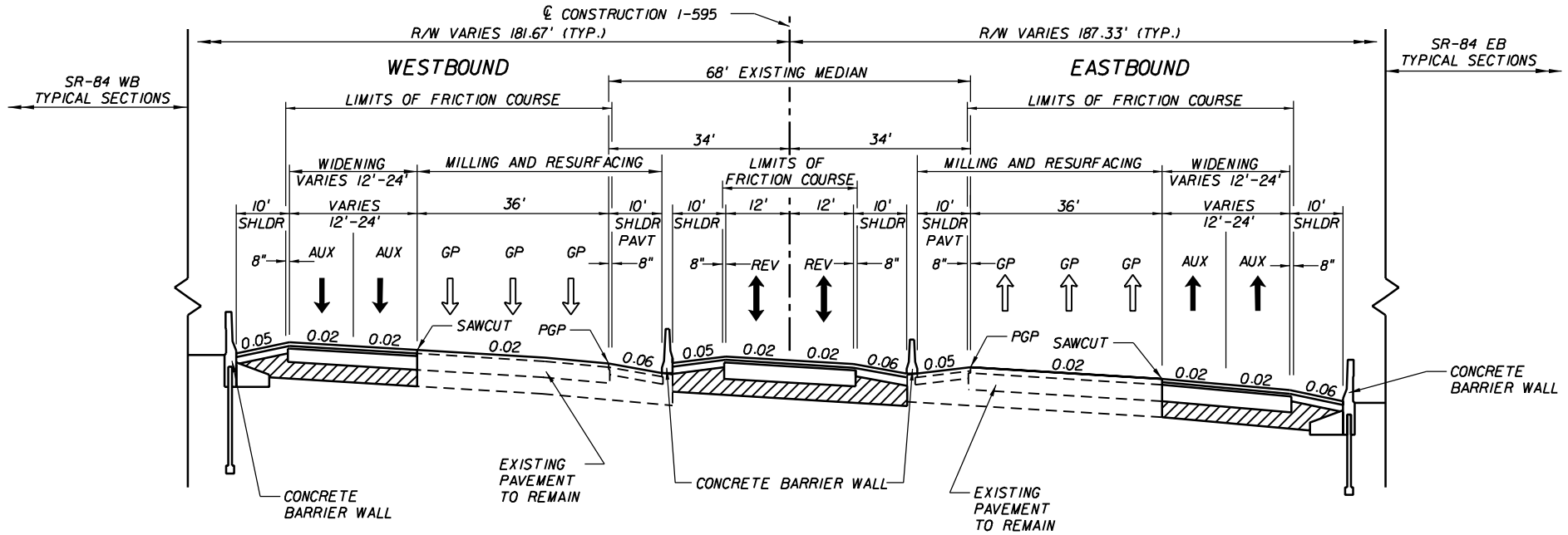

I-595 (SR-862) ALTERNATIVES IA & IB
SUPERELEVATED SECTION
AT UNIVERSITY DR.
(68' EXISTING MEDIAN)

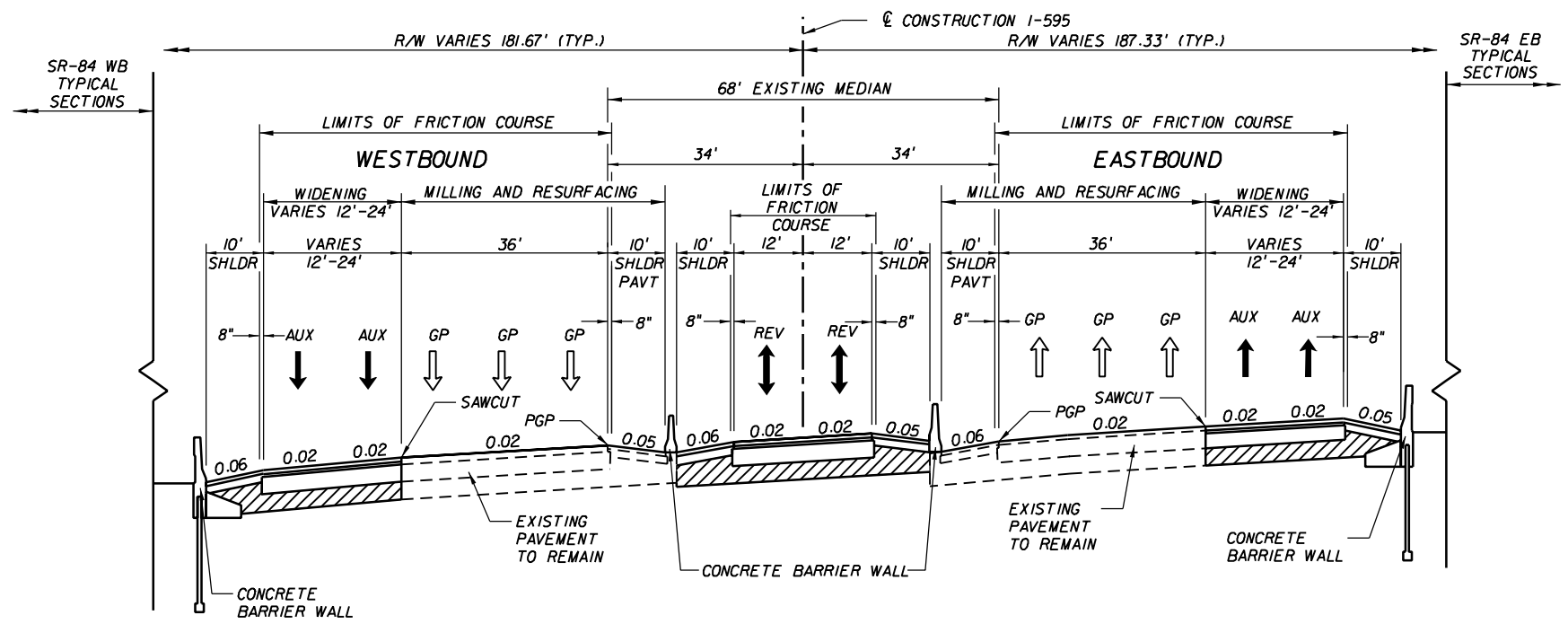

I-595 (SR-862) ALTERNATIVES IA & IB
SUPERELEVATED SECTION
AT UNIVERSITY DR.
(68' EXISTING MEDIAN)

REVISIONS					
DATE	BY	DESCRIPTION	DATE	BY	DESCRIPTION

RS&H
Reynolds, Smith and Hills, Inc.
300 S. Pine Island Road, Suite 300
Plantation, Florida 33324-2619
954-474-3005
FL Cert. No. EB0005620
Phil Schwab, P.E. No. 47555

STATE OF FLORIDA
DEPARTMENT OF TRANSPORTATION

ROAD NO.	COUNTY	FINANCIAL PROJECT ID
862	BROWARD	409354-1-22-01

ALTERNATIVES 1A & 1B TYPICAL SECTIONS

SHEET NO. 4

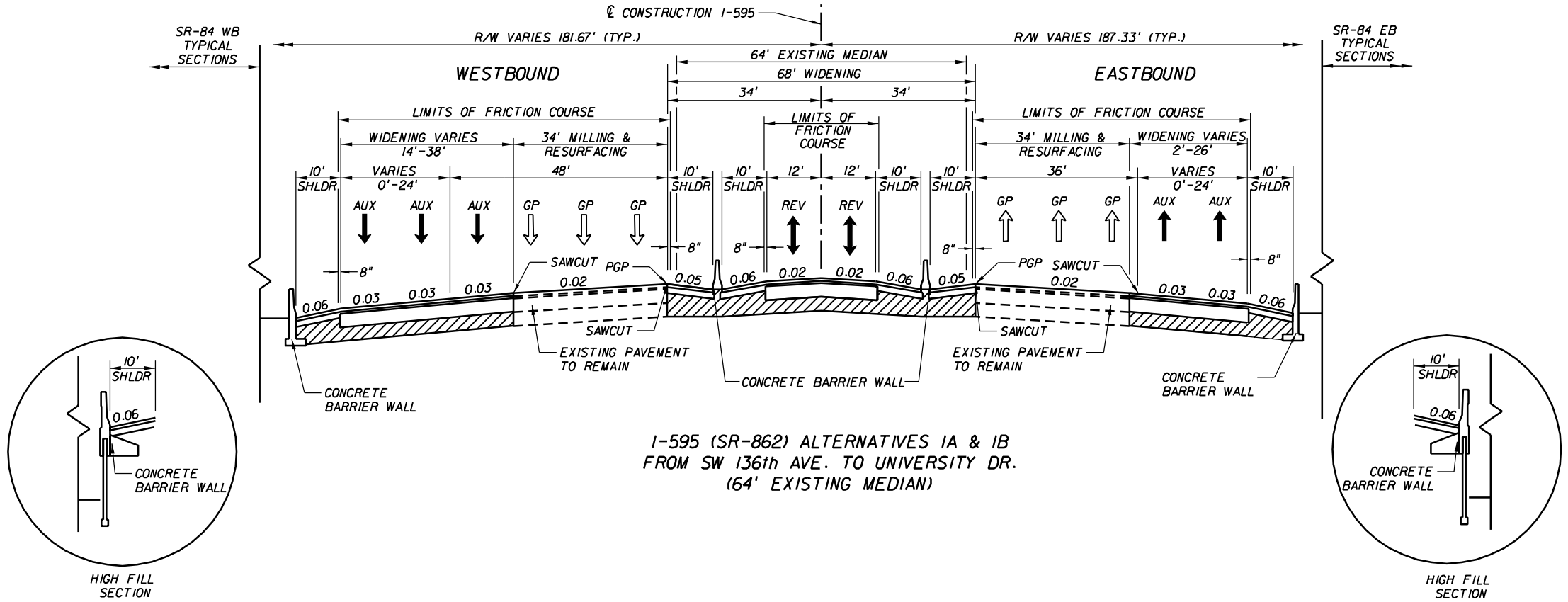

I-595 (SR-862) ALTERNATIVES IA & IB
FROM SW 136th AVE. TO UNIVERSITY DR.
(64' EXISTING MEDIAN)

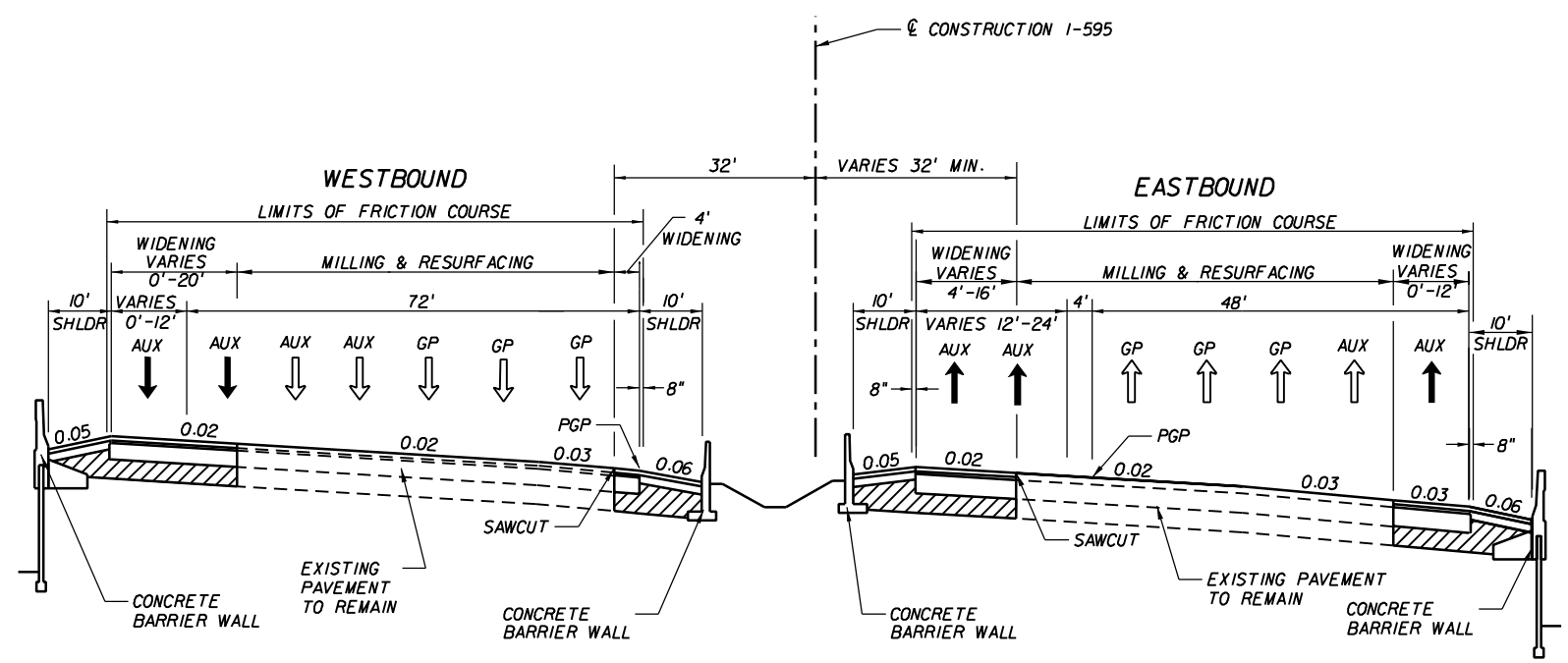

I-595 (SR-862) ALTERNATIVES IA & IB
SUPERELEVATED SECTION
AT SW 136TH AVE.

REVISIONS					
DATE	BY	DESCRIPTION	DATE	BY	DESCRIPTION

RS&H
Reynolds, Smith and Hills, Inc.
300 S. Pine Island Road, Suite 300
Plantation, Florida 33324-2619
954-474-3005
FL Cert. No. EB0005620
Phil Schwab, P.E. No. 47555

STATE OF FLORIDA
DEPARTMENT OF TRANSPORTATION

ROAD NO.	COUNTY	FINANCIAL PROJECT ID
862	BROWARD	409354-1-22-01

ALTERNATIVES 1A & 1B TYPICAL SECTIONS

SHEET NO. 5

2/14/2006 2:45:47 PM x:\projects\II4553000\roadway\PE Report\typsrd01b.dgn

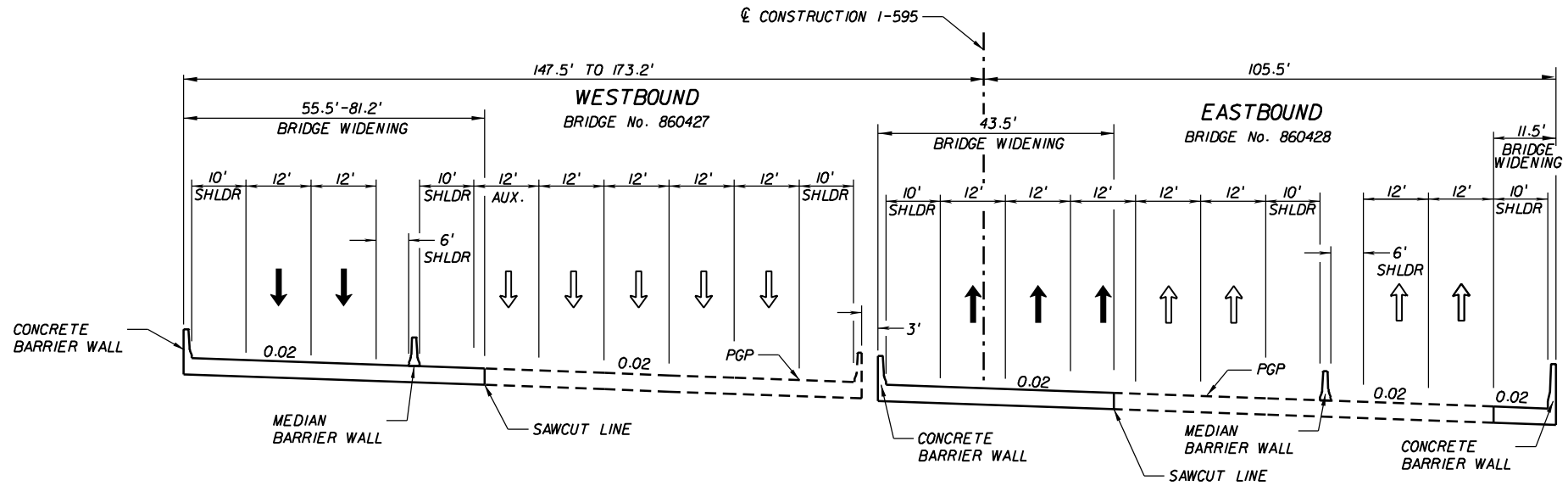

I-595 (SR-862) ALTERNATIVES 1A, 1B, 2A, 2B
BRIDGES OVER POND APPLE SLOUGH
(SUPERELEVATED SECTION)

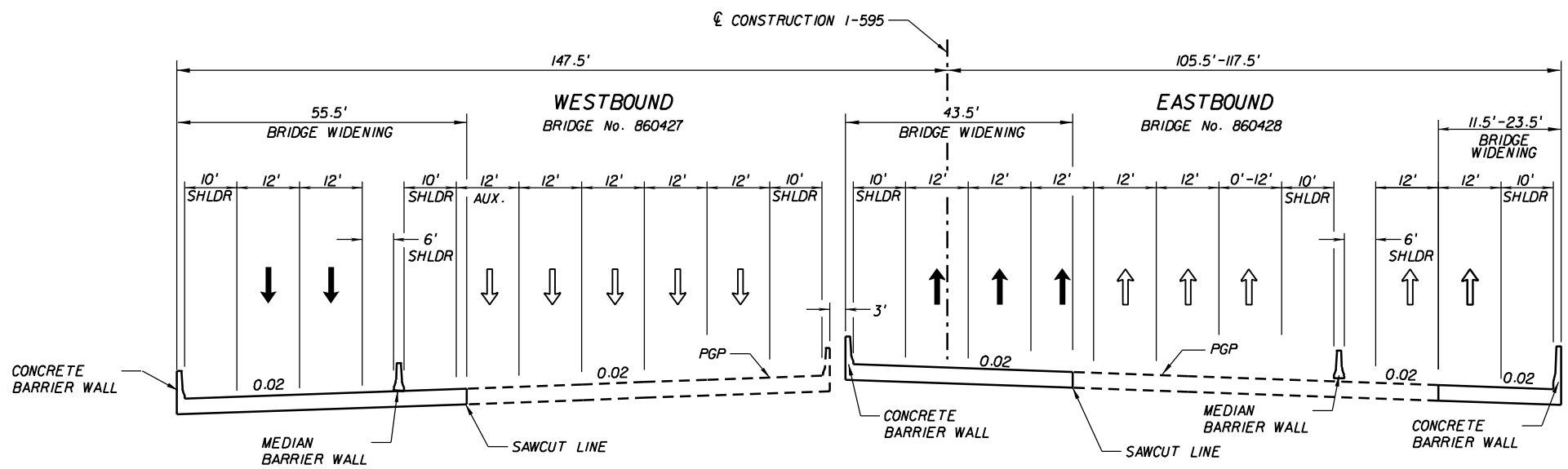

I-595 (SR-862) ALTERNATIVES 1A, 1B, 2A, 2B
BRIDGES OVER POND APPLE SLOUGH

REVISIONS					
DATE	BY	DESCRIPTION	DATE	BY	DESCRIPTION

RS&H
Reynolds, Smith and Hills, Inc.
300 S. Pine Island Road, Suite 300
Plantation, Florida 33324-2619
954-474-3005
FL Cert. No. EB0005620
Phil Schwab, P.E. No. 47555

STATE OF FLORIDA
DEPARTMENT OF TRANSPORTATION

ROAD NO.	COUNTY	FINANCIAL PROJECT ID
862	BROWARD	409354-1-22-01

ALTERNATIVES 1A & 1B TYPICAL SECTIONS

SHEET NO. 6

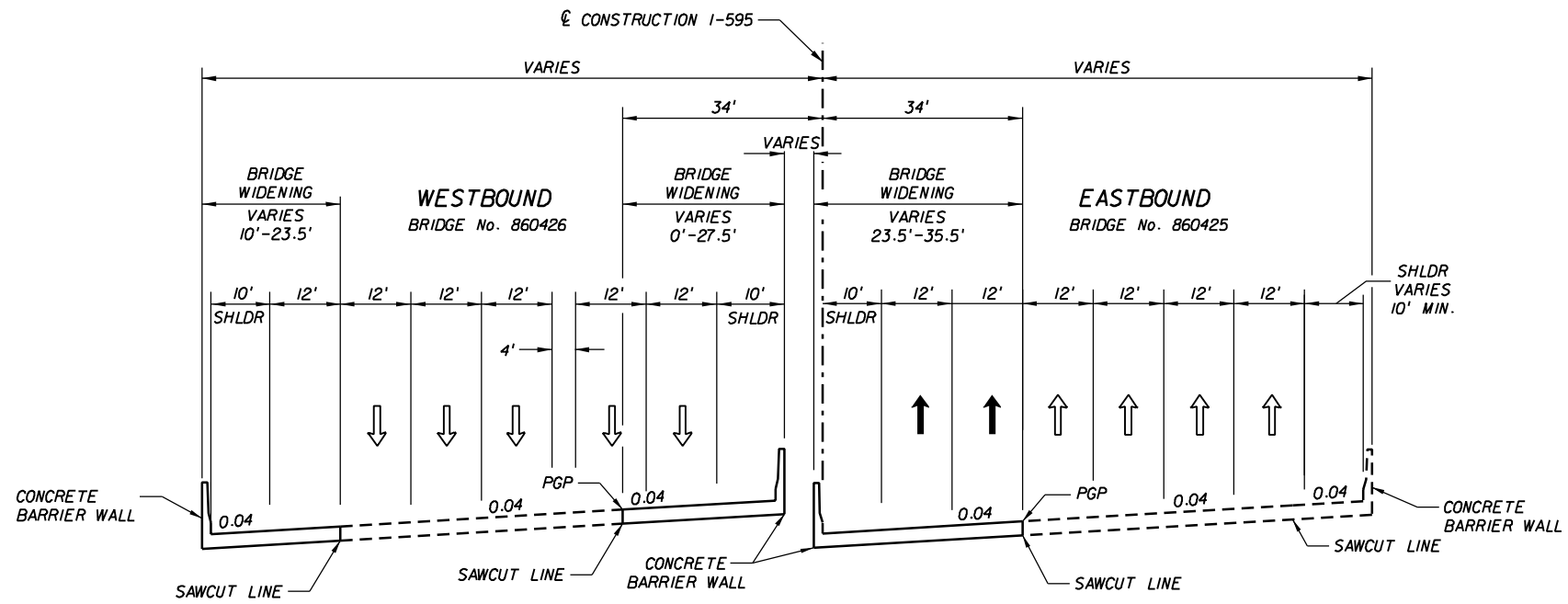

I-595 (SR-862) ALTERNATIVES IA, IB, 2A, 2B
BRIDGES OVER RAMPS TH & K

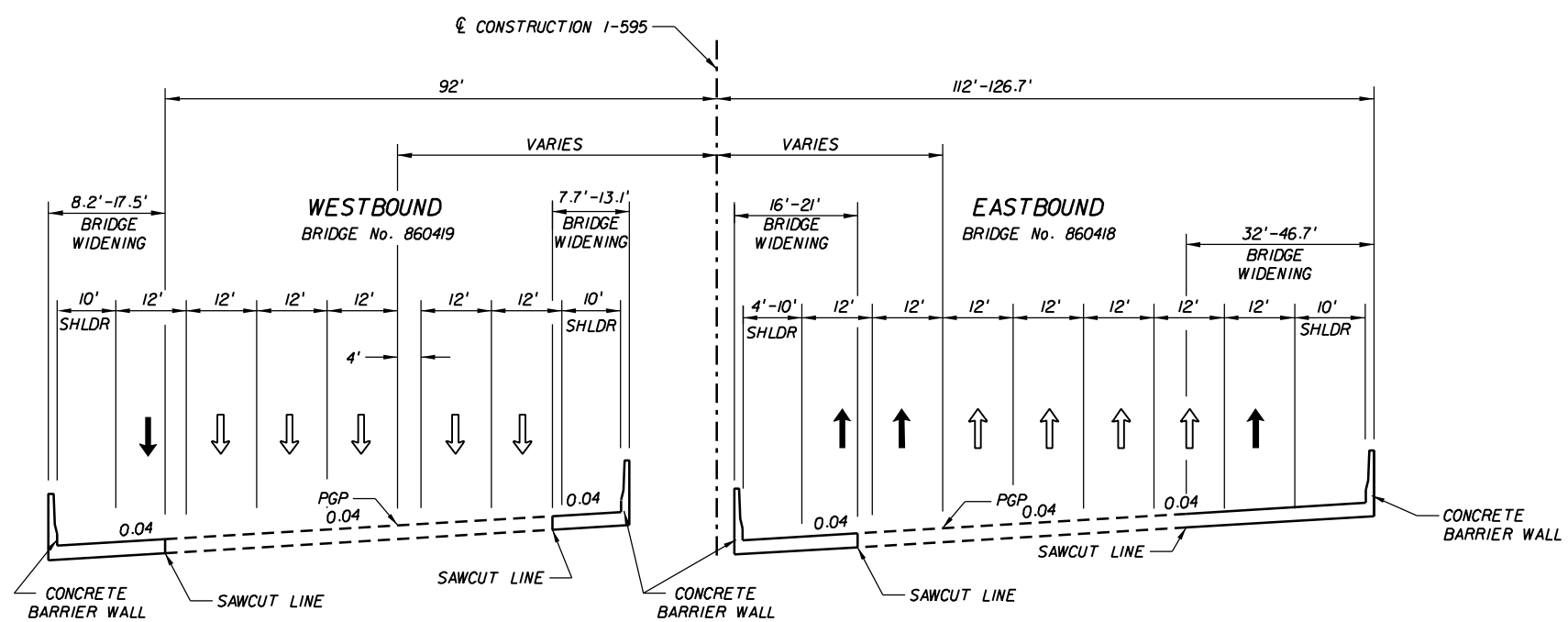

I-595 (SR-862) ALTERNATIVES IA, IB, 2A, 2B
BRIDGES OVER SR-7 (US-441)

REVISIONS					
DATE	BY	DESCRIPTION	DATE	BY	DESCRIPTION

RS&H
Reynolds, Smith and Hills, Inc.
300 S. Pine Island Road, Suite 300
Plantation, Florida 33324-2619
954-474-3005
FL Cert. No. EB0005620
Phil Schwab, P.E. No. 47555

STATE OF FLORIDA
DEPARTMENT OF TRANSPORTATION

ROAD NO.	COUNTY	FINANCIAL PROJECT ID
862	BROWARD	409354-1-22-01

ALTERNATIVES 1A & 1B TYPICAL SECTIONS

SHEET NO. 7

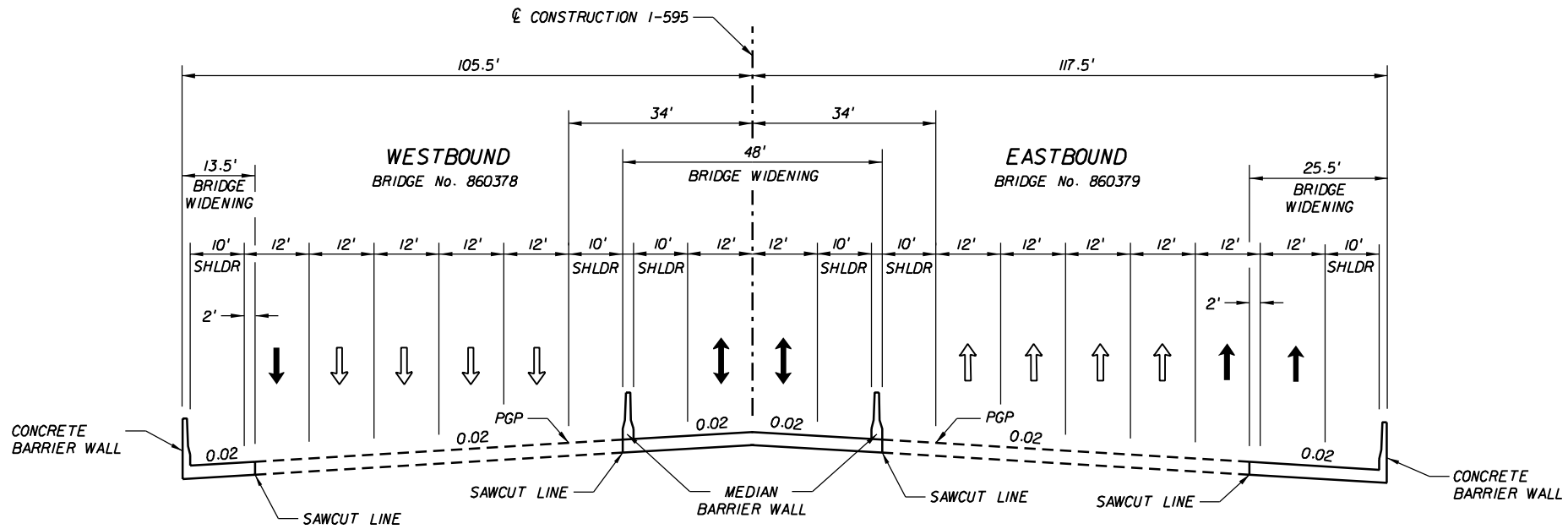

I-595 (SR-862) ALTERNATIVES IA & IB
BRIDGES OVER DAVIE ROAD

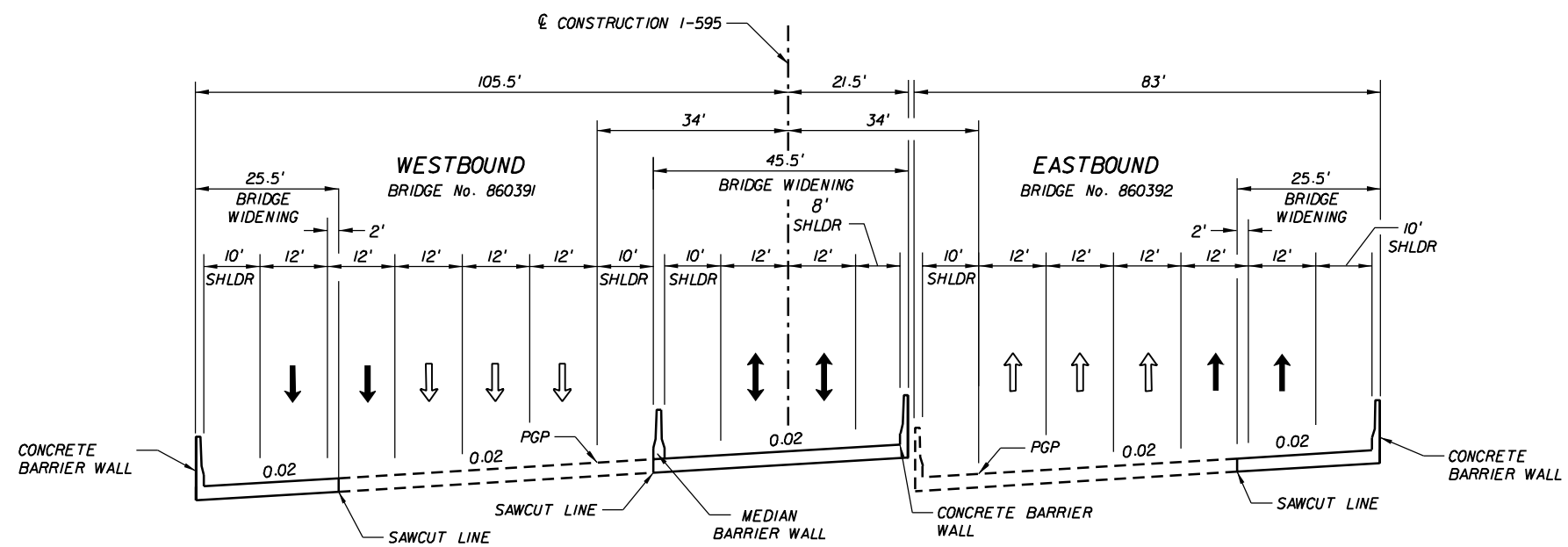

I-595 (SR-862) ALTERNATIVES IA & IB
BRIDGES OVER UNIVERSITY DRIVE

REVISIONS					
DATE	BY	DESCRIPTION	DATE	BY	DESCRIPTION

RS&H
Reynolds, Smith and Hills, Inc.
300 S. Pine Island Road, Suite 300
Plantation, Florida 33324-2619
954-474-3005
FL Cert. No. EB0005620
Phil Schwab, P.E. No. 47555

STATE OF FLORIDA
DEPARTMENT OF TRANSPORTATION

ROAD NO.	COUNTY	FINANCIAL PROJECT ID
862	BROWARD	409354-1-22-01

ALTERNATIVES 1A & 1B TYPICAL SECTIONS

SHEET NO. 8

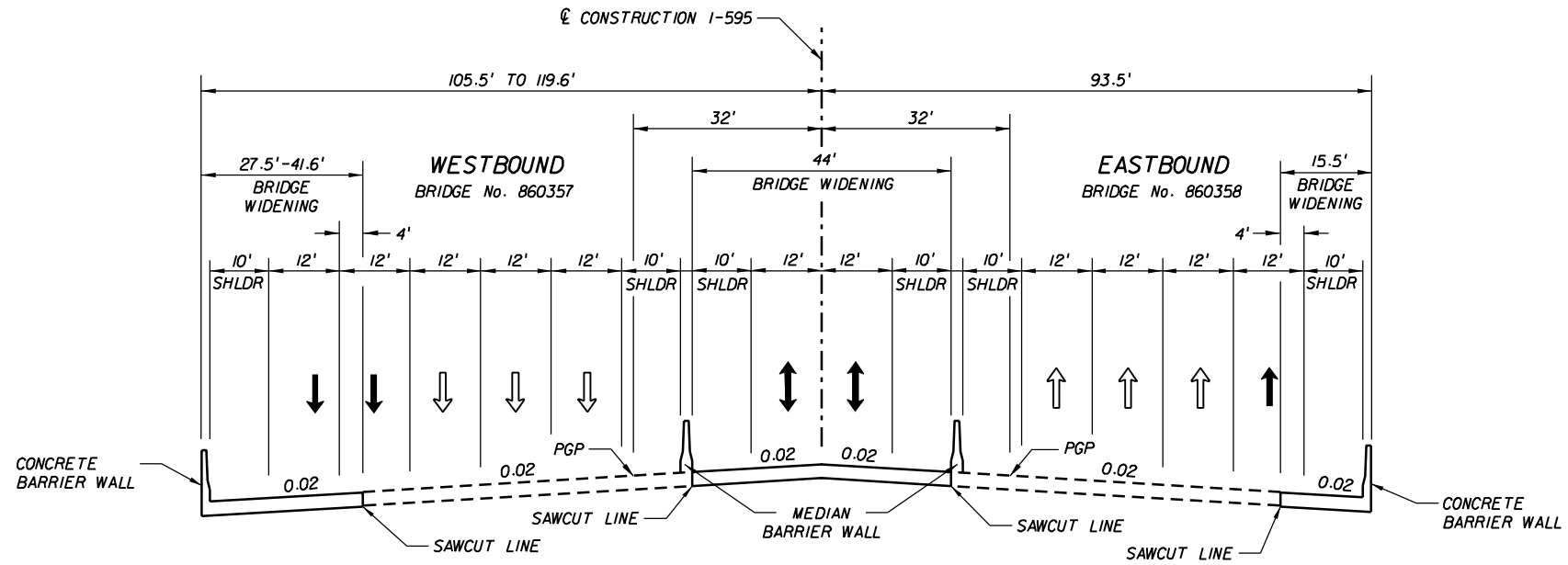

I-595 (SR-862) ALTERNATIVES IA & IB
BRIDGES OVER PINE ISLAND ROAD

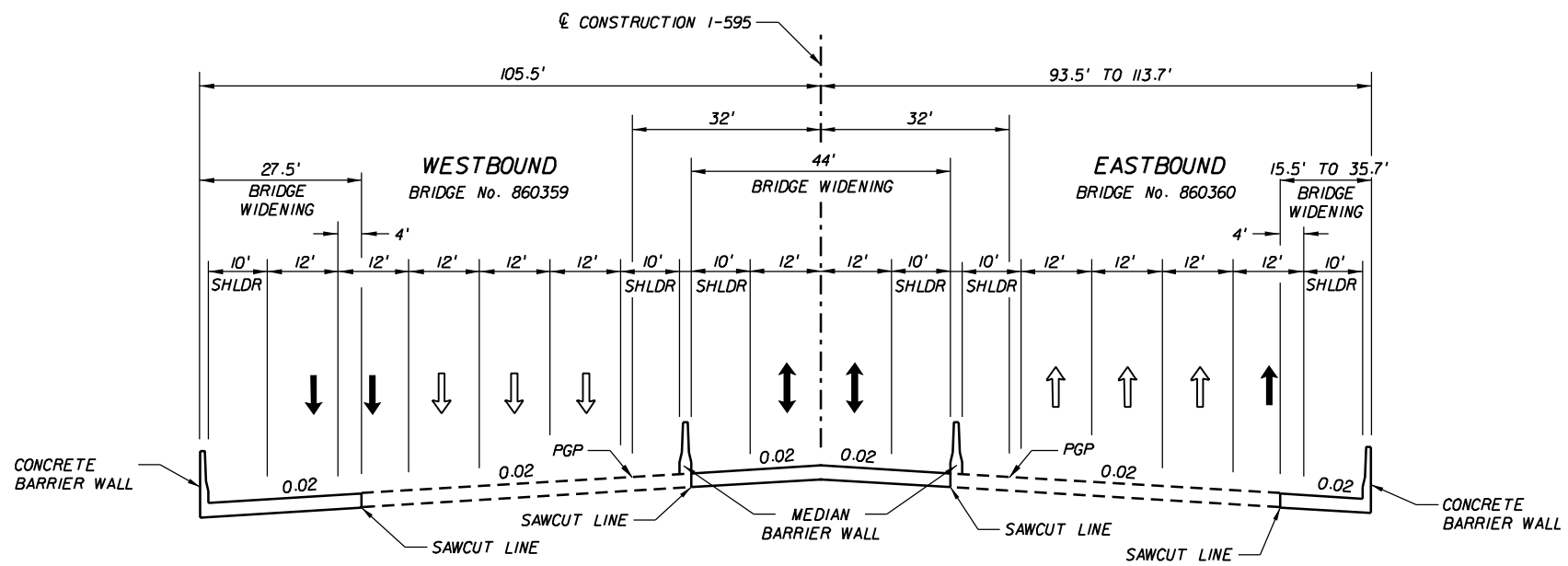

I-595 (SR-862) ALTERNATIVES IA & IB
BRIDGES OVER NOB HILL ROAD

REVISIONS					
DATE	BY	DESCRIPTION	DATE	BY	DESCRIPTION

RS&H
Reynolds, Smith and Hills, Inc.
300 S. Pine Island Road, Suite 300
Plantation, Florida 33324-2619
954-474-3005
FL Cert. No. EB0005620
Phil Schwab, P.E. No. 47555

STATE OF FLORIDA
DEPARTMENT OF TRANSPORTATION

ROAD NO.	COUNTY	FINANCIAL PROJECT ID
862	BROWARD	409354-1-22-01

ALTERNATIVES 1A & 1B TYPICAL SECTIONS

SHEET NO.
9

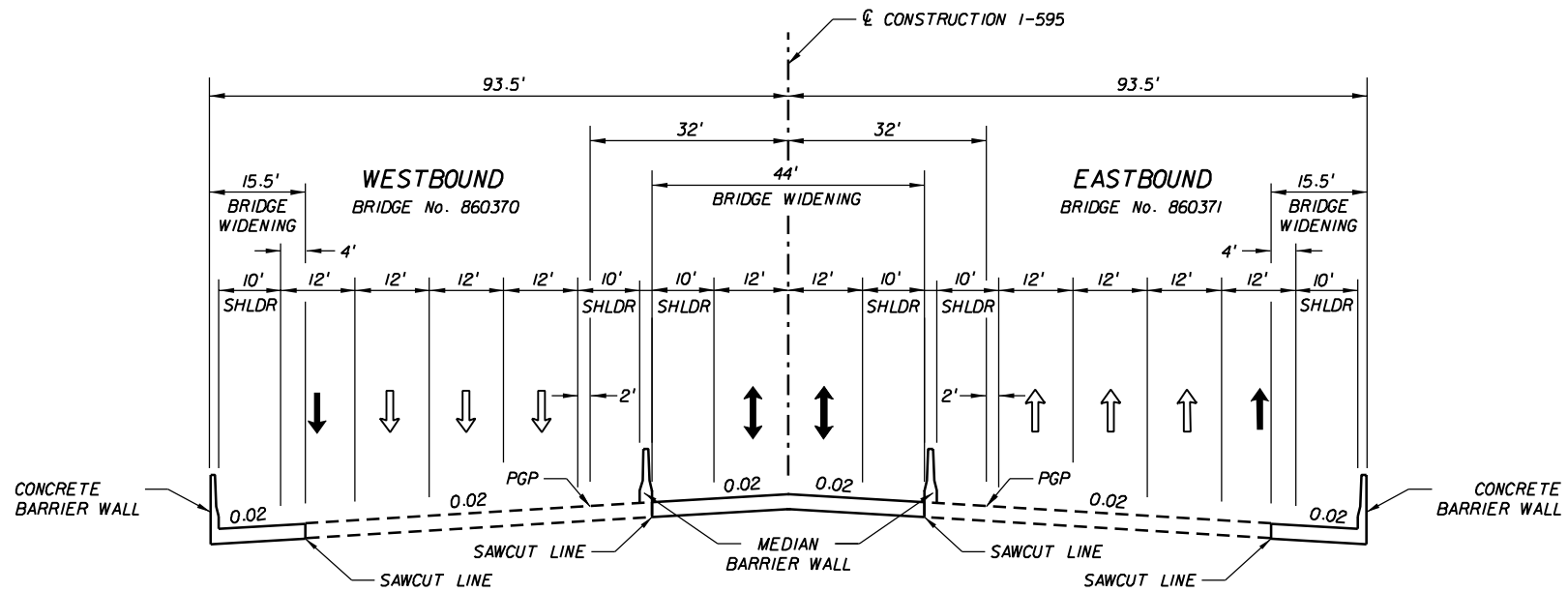

I-595 (SR-862) ALTERNATIVES IA & IB
BRIDGES OVER HIATUS ROAD

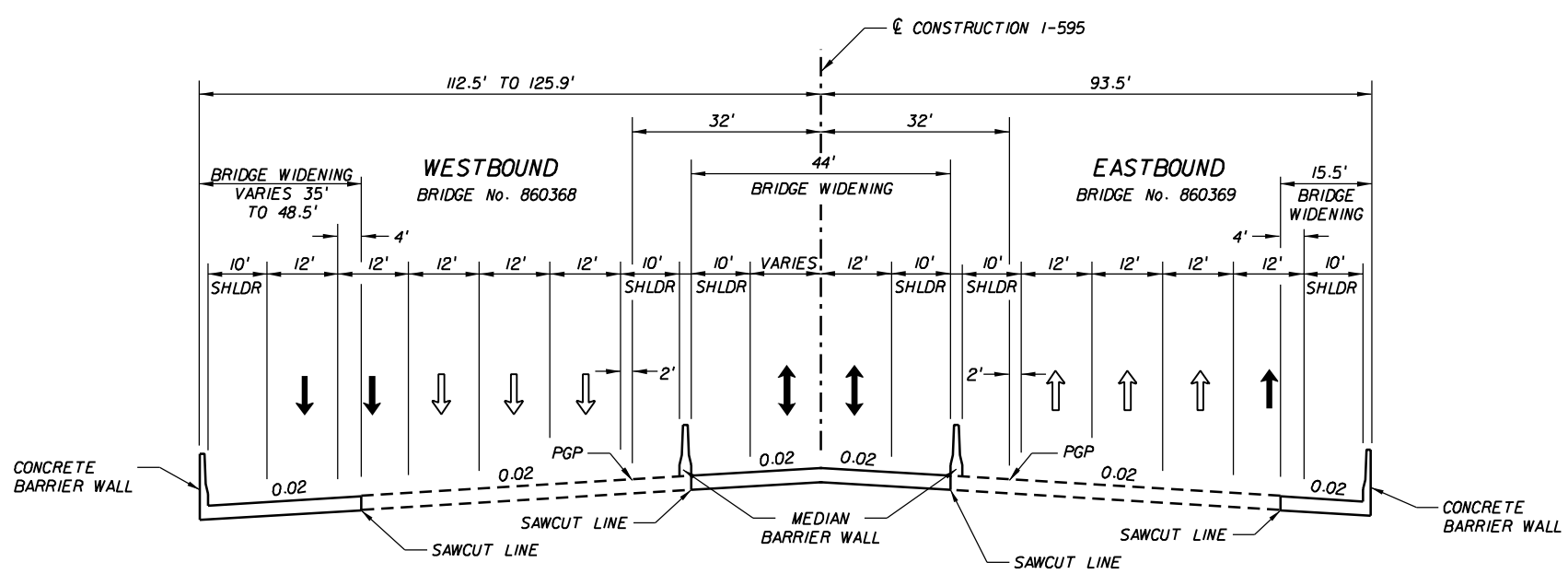

I-595 (SR-862) ALTERNATIVES IA & IB
BRIDGES OVER FLAMINGO ROAD

REVISIONS					
DATE	BY	DESCRIPTION	DATE	BY	DESCRIPTION

RS&H
Reynolds, Smith and Hills, Inc.
300 S. Pine Island Road, Suite 300
Plantation, Florida 33324-2619
954-474-3005
FL Cert. No. EB0005620
Phil Schwab, P.E. No. 47555

STATE OF FLORIDA
DEPARTMENT OF TRANSPORTATION

ROAD NO.	COUNTY	FINANCIAL PROJECT ID
862	BROWARD	409354-1-22-01

ALTERNATIVES 1A & 1B TYPICAL SECTIONS

SHEET NO.
10

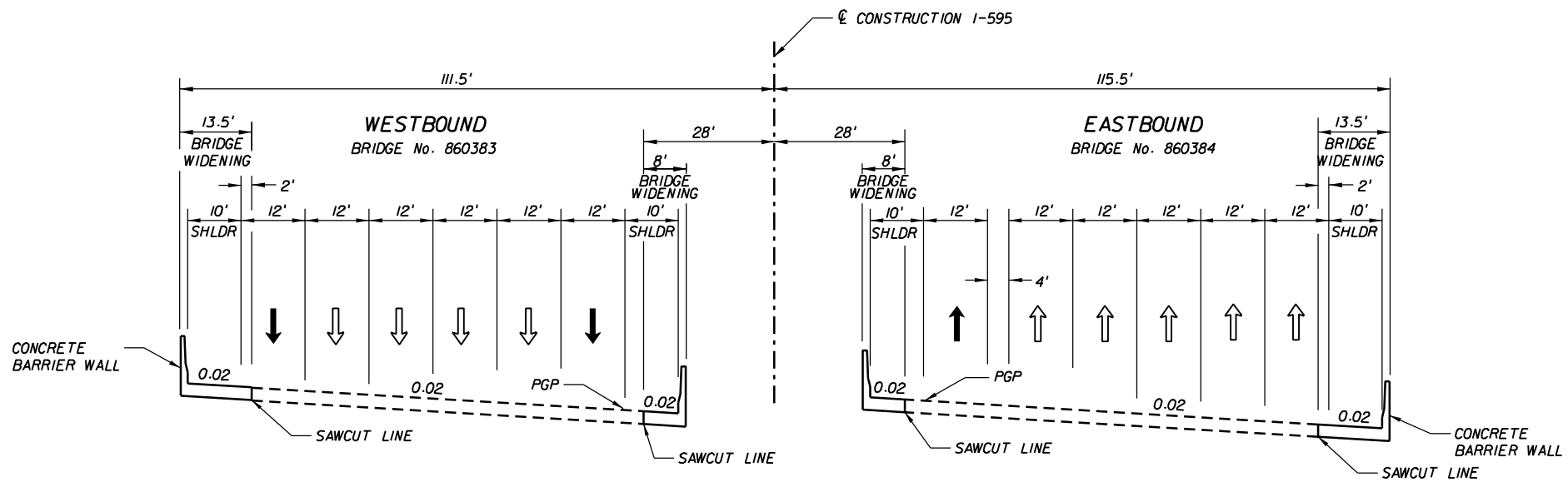

I-595 (SR-862) ALTERNATIVES 1A, 1B, 2A, 2B
BRIDGES OVER SW 136TH STREET

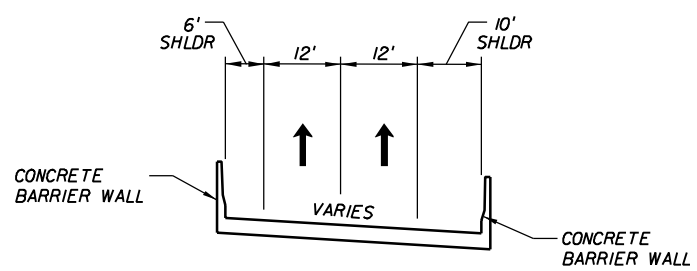

2 LANE BRIDGE STRUCTURE

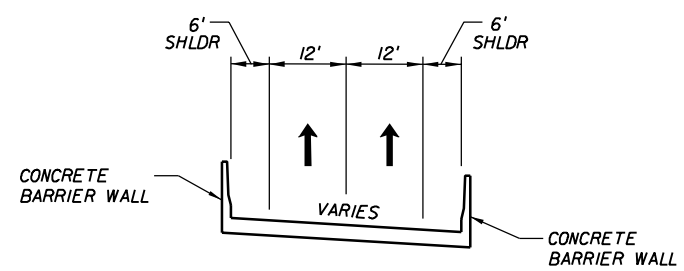

2 LANE BRIDGE STRUCTURE
WITH REDUCED OUTSIDE SHOULDER

FLAMINGO ROAD WB OFF RAMP
PINE ISLAND ROAD EB OFF RAMP
NOB HILL ROAD WB OFF RAMP
UNIVERSITY DRIVE WB OFF RAMP

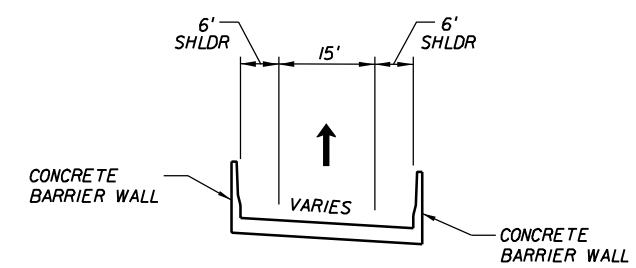

1 LANE BRIDGE STRUCTURE

HIATUS ROAD EB BYPASS RAMPS
PINE ISLAND ROAD EB BYPASS RAMP
UNIVERSITY DRIVE FLYOVER RAMPS
DAVIE ROAD EB RAMP
NOB HILL ROAD WB ON RAMP

REVISIONS					
DATE	BY	DESCRIPTION	DATE	BY	DESCRIPTION

RS&H
Reynolds, Smith and Hills, Inc.
300 S. Pine Island Road, Suite 300
Plantation, Florida 33324-2619
954-474-3005
FL Cert. No. EB0005620
Phil Schwab, P.E. No. 47555

STATE OF FLORIDA
DEPARTMENT OF TRANSPORTATION

ROAD NO.	COUNTY	FINANCIAL PROJECT ID
862	BROWARD	409354-1-22-01

ALTERNATIVES 1A & 1B TYPICAL SECTIONS

SHEET NO.
11

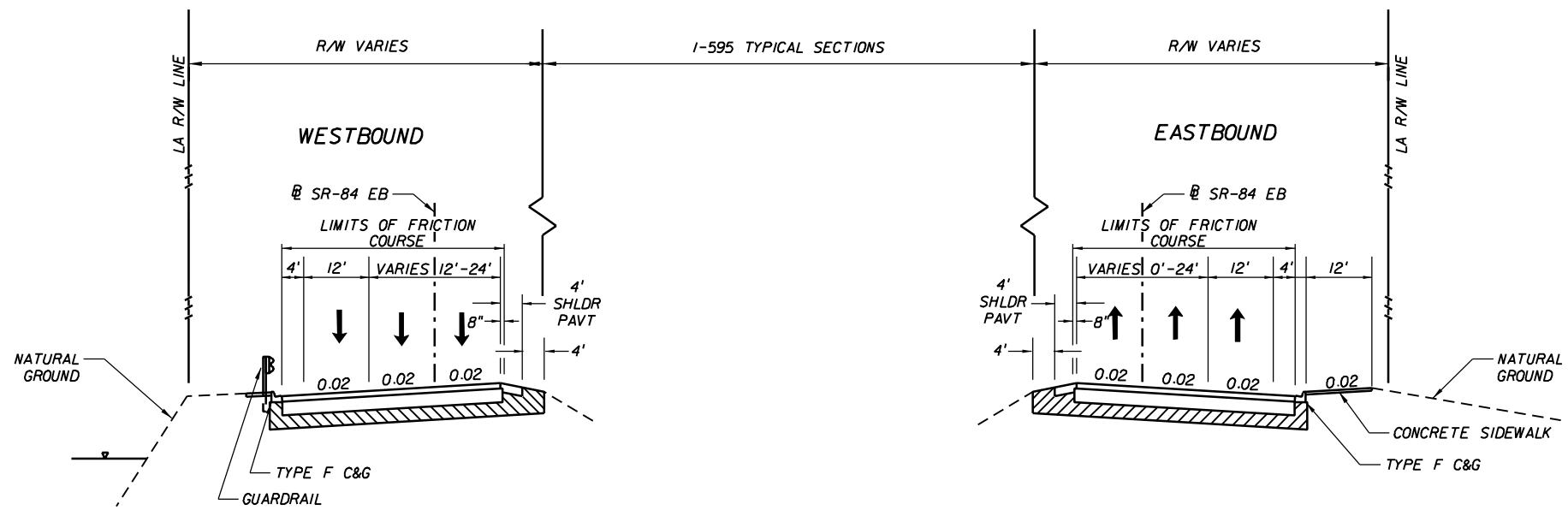

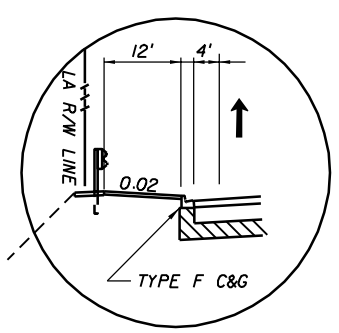

WITH ADJACENT MIXED USE BIKE PATH (DAVIE RD. TO SR-7)

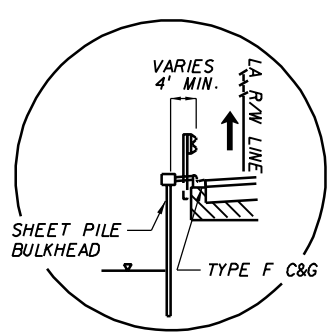

BULKHEAD SECTION (INSIDE SFWMD R/W)

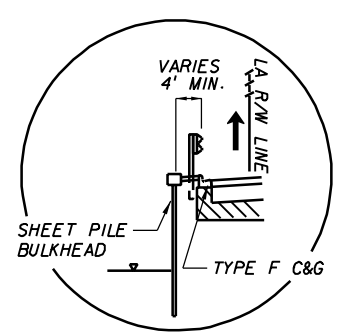

BULKHEAD SECTION WITH 8' NOISE WALL (INSIDE SFWMD R/W)

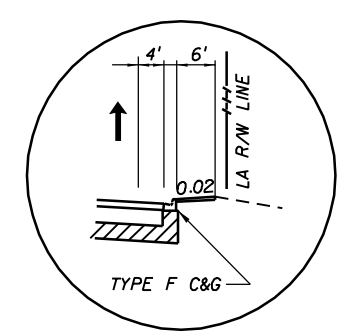

WITH ADJACENT 6' SIDEWALK (UNIVERSITY DR. TO DAVIE RD.)

REVISIONS					
DATE	BY	DESCRIPTION	DATE	BY	DESCRIPTION

RS&H
Reynolds, Smith and Hills, Inc.
300 S. Pine Island Road, Suite 300
Plantation, Florida 33324-2619
954-474-3005
FL Cert. No. EB0005620
Phil Schwab, P.E. No. 47555

STATE OF FLORIDA
DEPARTMENT OF TRANSPORTATION

ROAD NO.	COUNTY	FINANCIAL PROJECT ID
862	BROWARD	409354-1-22-01

ALTERNATIVES 1A & 1B TYPICAL SECTIONS

SHEET NO. 12

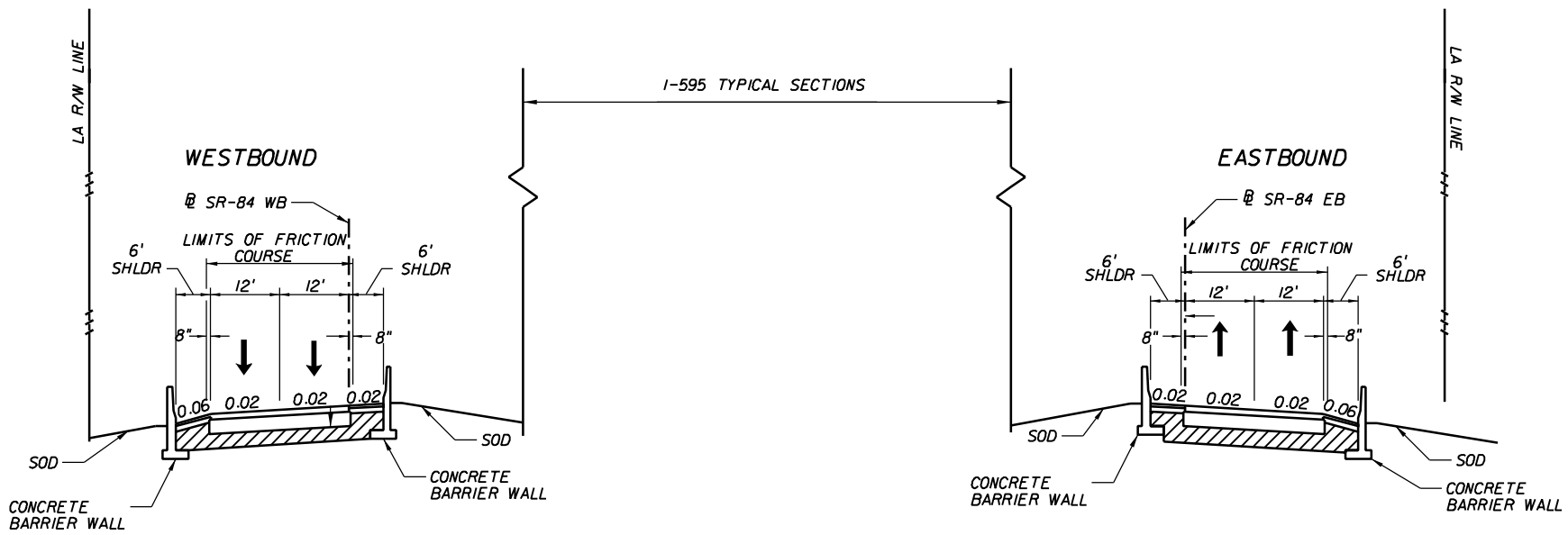

SR-84
WITH REDUCED OUTSIDE SHOULDER AT RAMP BRAIDS

REVISIONS					
DATE	BY	DESCRIPTION	DATE	BY	DESCRIPTION

RS&H
Reynolds, Smith and Hills, Inc.
300 S. Pine Island Road, Suite 300
Plantation, Florida 33324-2619
954-474-3005
FL Cert. No. EB0005620
Phil Schwab, P.E. No. 47555

STATE OF FLORIDA
DEPARTMENT OF TRANSPORTATION

ROAD NO.	COUNTY	FINANCIAL PROJECT ID
862	BROWARD	409354-1-22-01

ALTERNATIVES 1A & 1B
TYPICAL SECTIONS

SHEET NO.
13

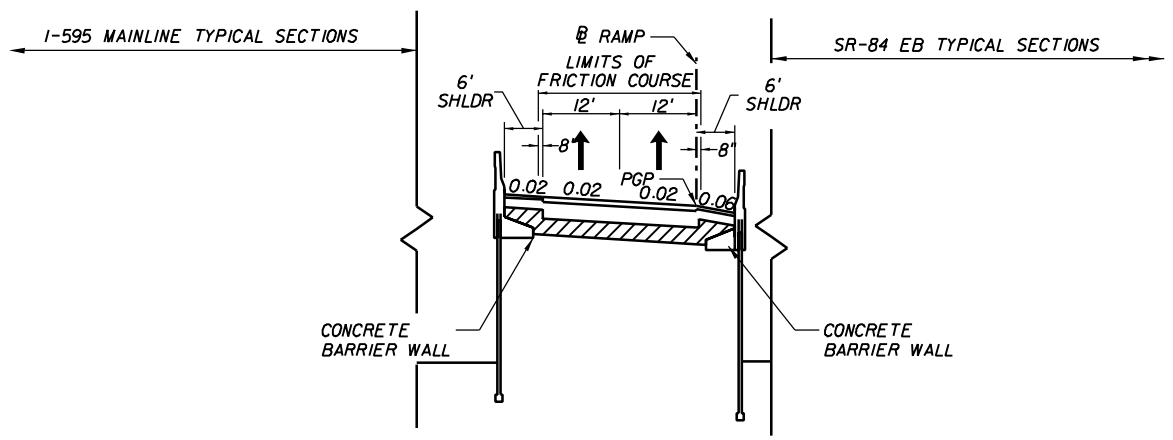

2 LANE RAMP
ON WALL WITH REDUCED OUTSIDE SHOULDER AT RAMP BRAIDS

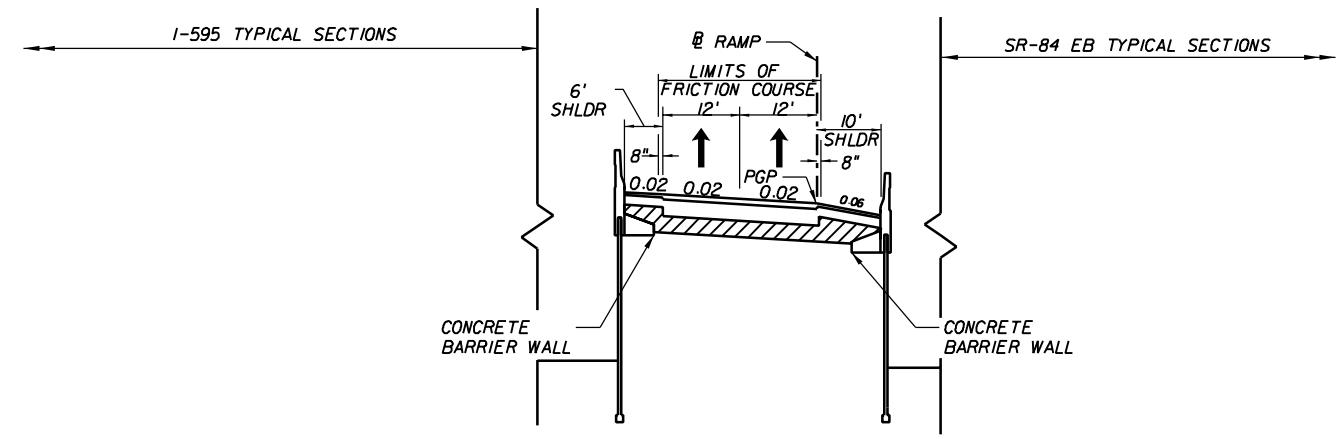

2 LANE RAMP ON WALL

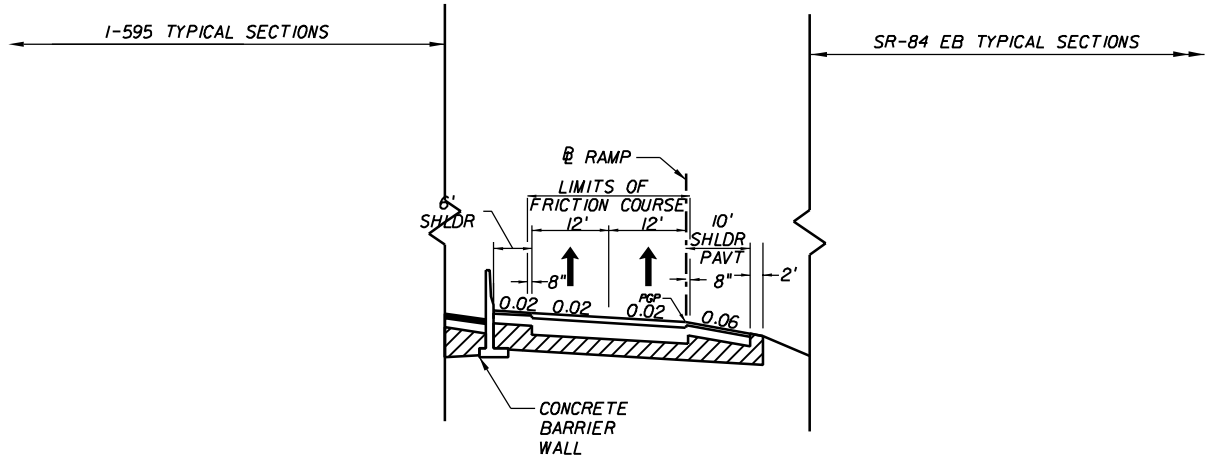

2 LANE RAMP
WITH FLUSH OUTSIDE SHOULDER

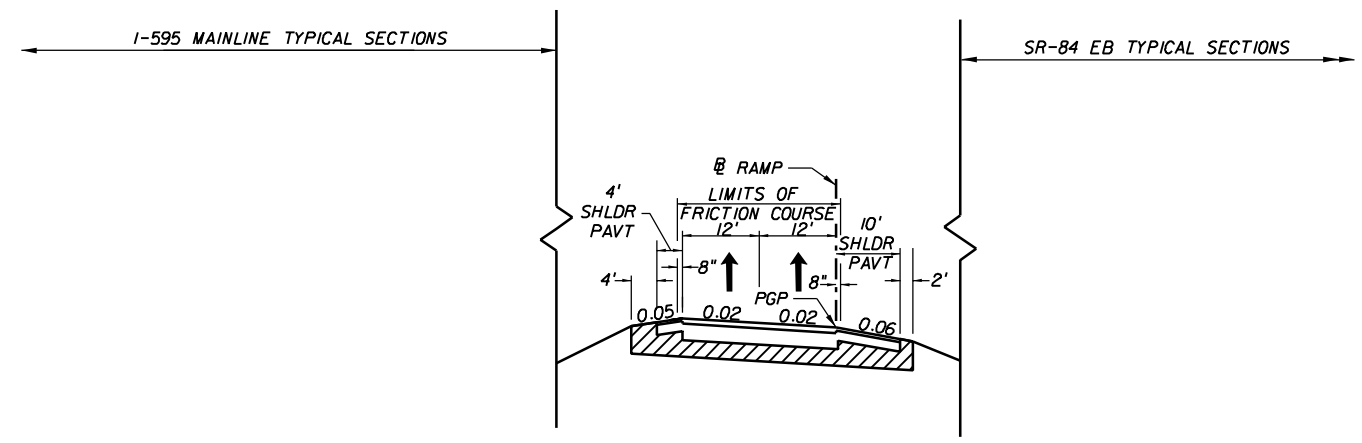

2 LANE RAMP
WITH FLUSH SHOULDERS

REVISIONS					
DATE	BY	DESCRIPTION	DATE	BY	DESCRIPTION

RS&H
Reynolds, Smith and Hills, Inc.
300 S. Pine Island Road, Suite 300
Plantation, Florida 33324-2619
954-474-3005
FL Cert. No. EB0005620
Phil Schwab, P.E. No. 47555

STATE OF FLORIDA
DEPARTMENT OF TRANSPORTATION

ROAD NO.	COUNTY	FINANCIAL PROJECT ID
862	BROWARD	409354-1-22-01

ALTERNATIVES 1A & 1B TYPICAL SECTIONS

SHEET NO.
14

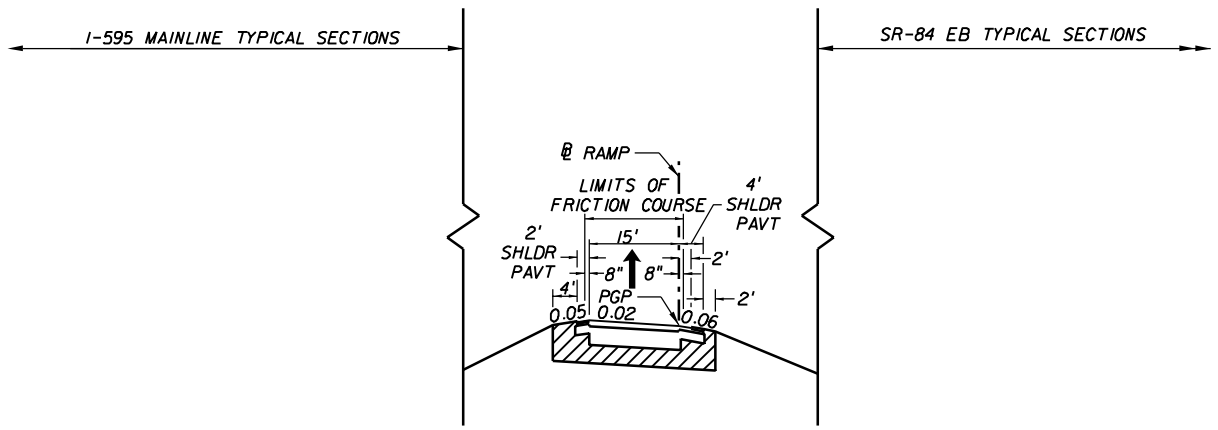

I LANE RAMP
WITH FLUSH SHOULDERS

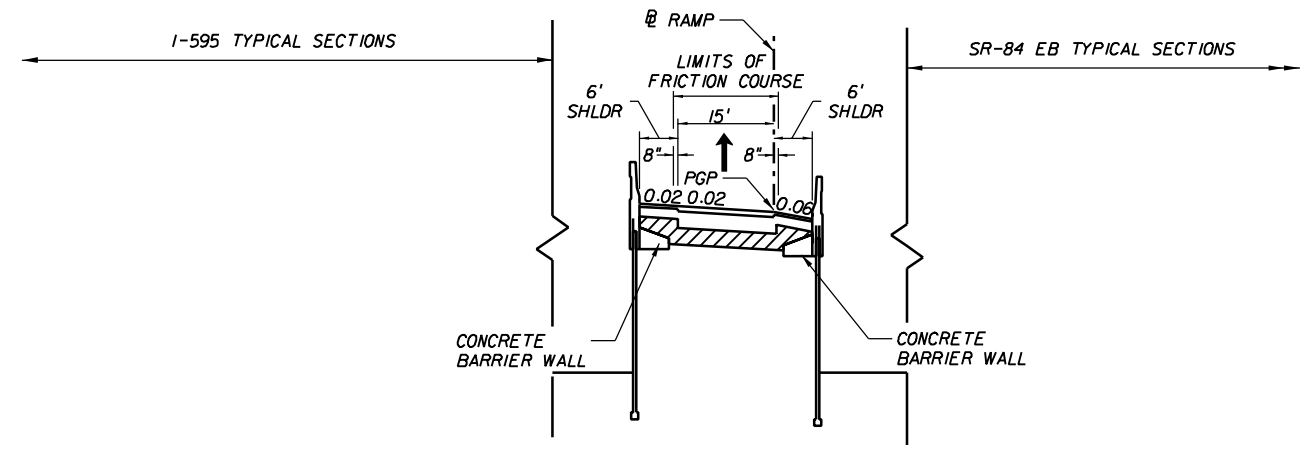

I LANE RAMP ON WALL

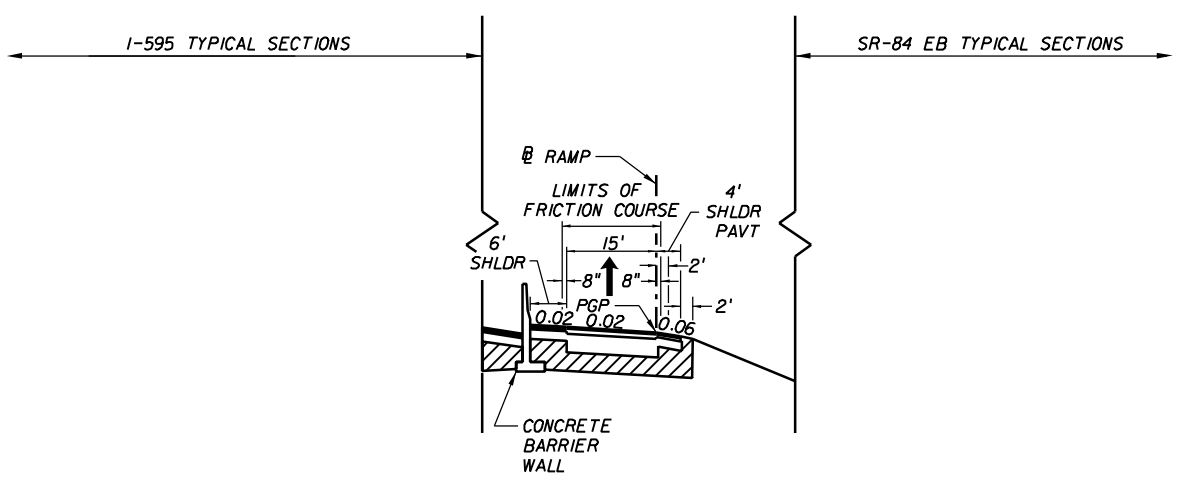

I LANE RAMP
WITH FLUSH OUTSIDE SHOULDER

REVISIONS					
DATE	BY	DESCRIPTION	DATE	BY	DESCRIPTION

RS&H
Reynolds, Smith and Hills, Inc.
300 S. Pine Island Road, Suite 300
Plantation, Florida 33324-2619
954-474-3005
FL Cert. No. EB0005620
Phil Schwab, P.E. No. 47555

STATE OF FLORIDA
DEPARTMENT OF TRANSPORTATION

ROAD NO.	COUNTY	FINANCIAL PROJECT ID
862	BROWARD	409354-1-22-01

ALTERNATIVES 1A & 1B TYPICAL SECTIONS

SHEET NO.
15

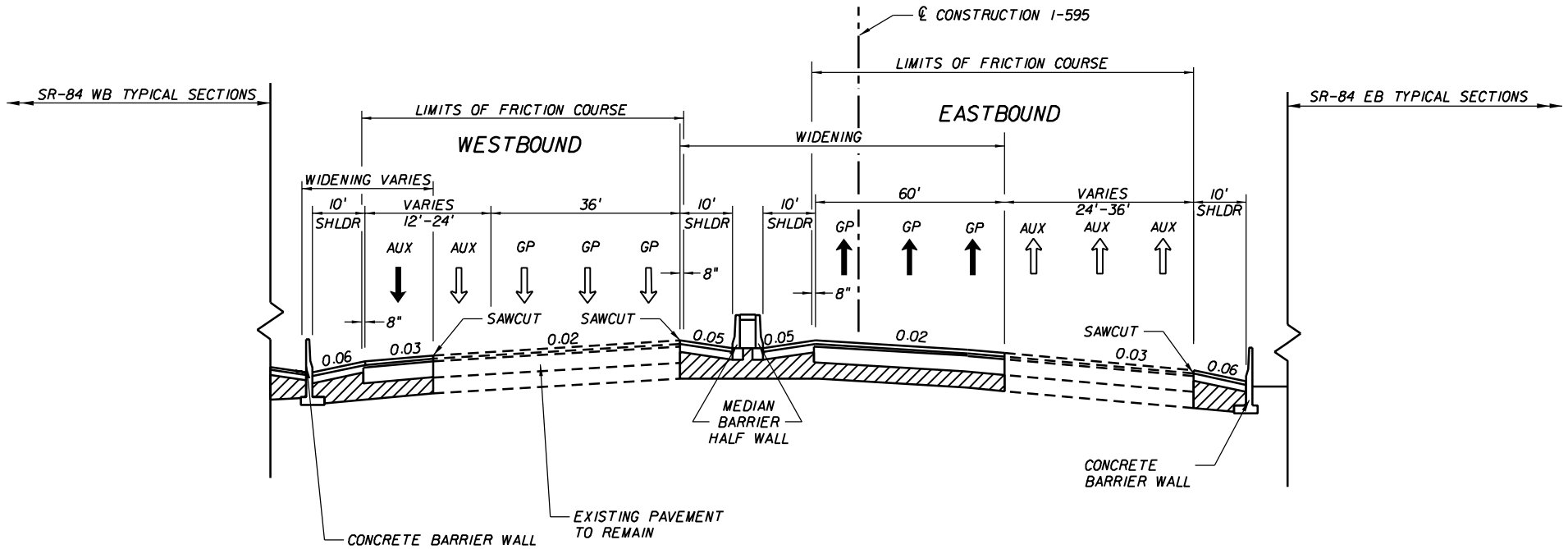

I-595 (SR-862) ALTERNATIVE 2A
NO FILL SECTION
FROM SR-7 TO VIADUCT OVER POND APPLE SLOUGH

REVISIONS					
DATE	BY	DESCRIPTION	DATE	BY	DESCRIPTION

RS&H
Reynolds, Smith and Hills, Inc.
300 S. Pine Island Road, Suite 300
Plantation, Florida 33324-2619
954-474-3005
FL Cert. No. EB0005620
Phil Schwab, P.E. No. 47555

STATE OF FLORIDA
DEPARTMENT OF TRANSPORTATION

ROAD NO.	COUNTY	FINANCIAL PROJECT ID
862	BROWARD	409354-1-22-01

ALTERNATIVE 2A
TYPICAL SECTIONS

SHEET NO.
16

2/14/2006 3:04:50 PM x:\projects\II4553000\roadway\PE Report\typsrd02a.dgn

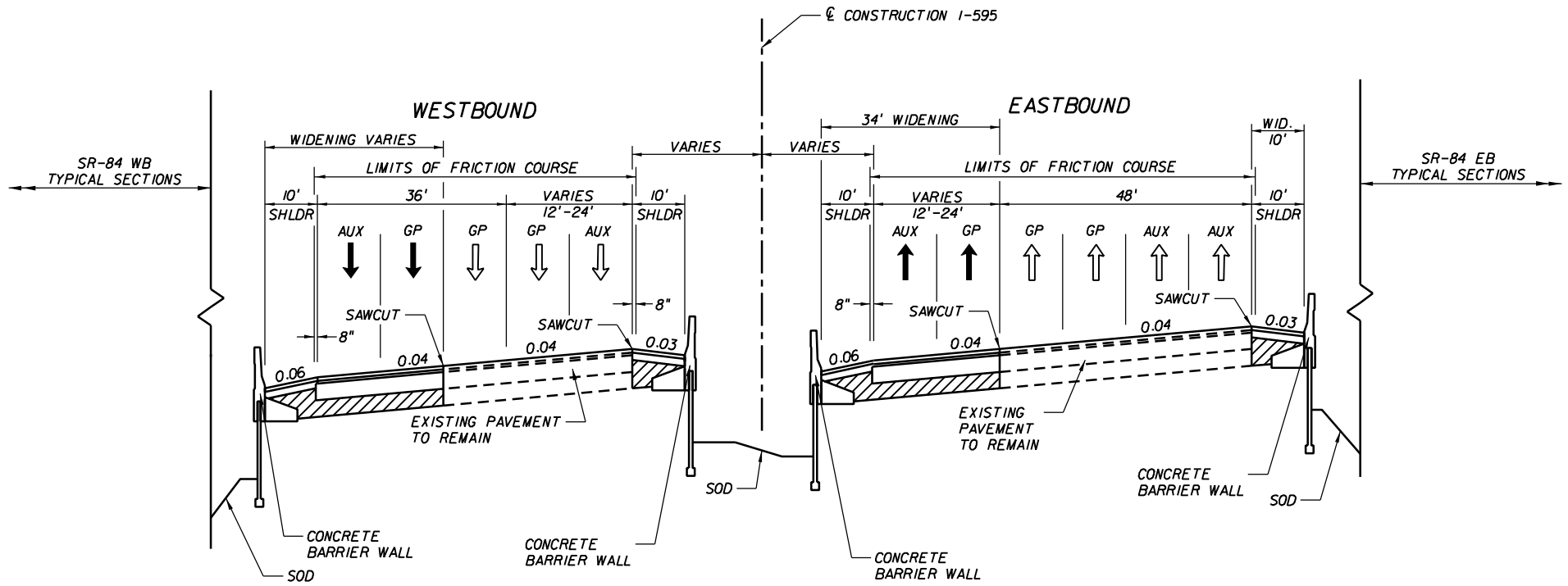

I-595 (SR-862) ALTERNATIVE 2A
SUPERELEVATED SECTION
AT SR-7

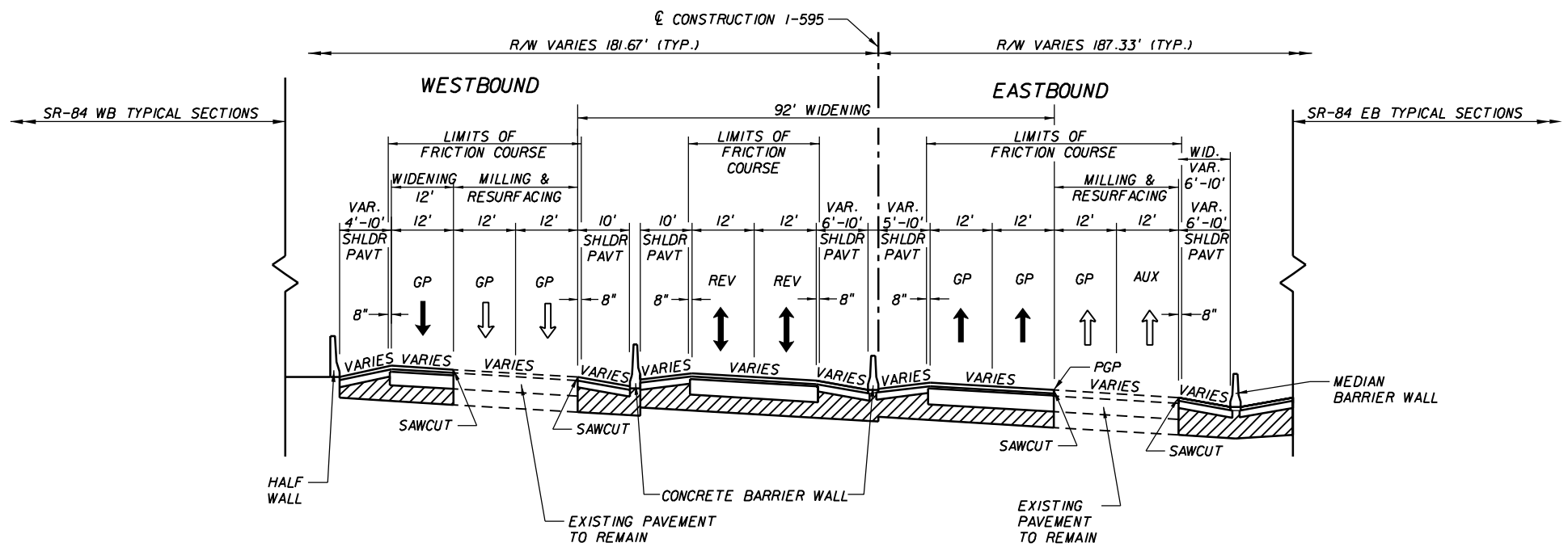

I-595 (SR-862) ALTERNATIVE 2A
SUPERELEVATED SECTION
AT FLORIDA'S TURNPIKE

REVISIONS					
DATE	BY	DESCRIPTION	DATE	BY	DESCRIPTION

RS&H
Reynolds, Smith and Hills, Inc.
300 S. Pine Island Road, Suite 300
Plantation, Florida 33324-2619
954-474-3005
FL Cert. No. EB0005620
Phil Schwab, P.E. No. 47555

STATE OF FLORIDA
DEPARTMENT OF TRANSPORTATION

ROAD NO.	COUNTY	FINANCIAL PROJECT ID
862	BROWARD	409354-1-22-01

ALTERNATIVE 2A TYPICAL SECTIONS

SHEET NO. 17

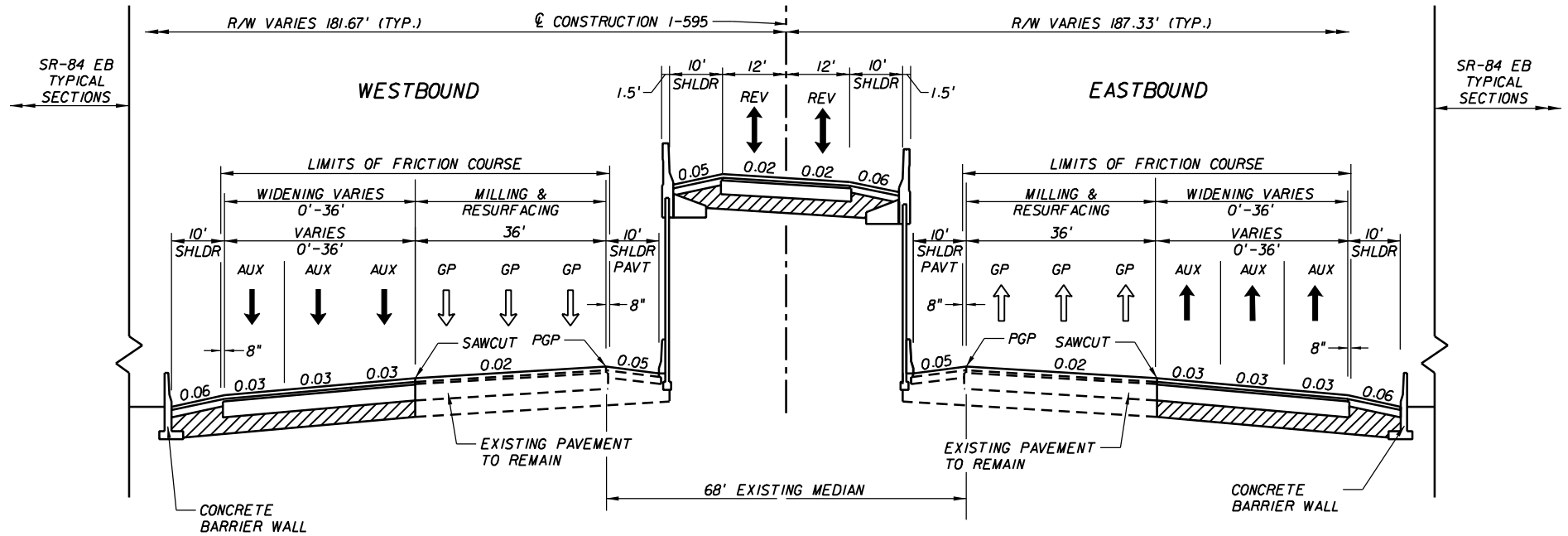

I-595 (SR-862) ALTERNATIVE 2A
FROM EAST OF FLORIDA'S TURNPIKE TO FLORIDA'S TURNPIKE
(68' EXISTING MEDIAN)

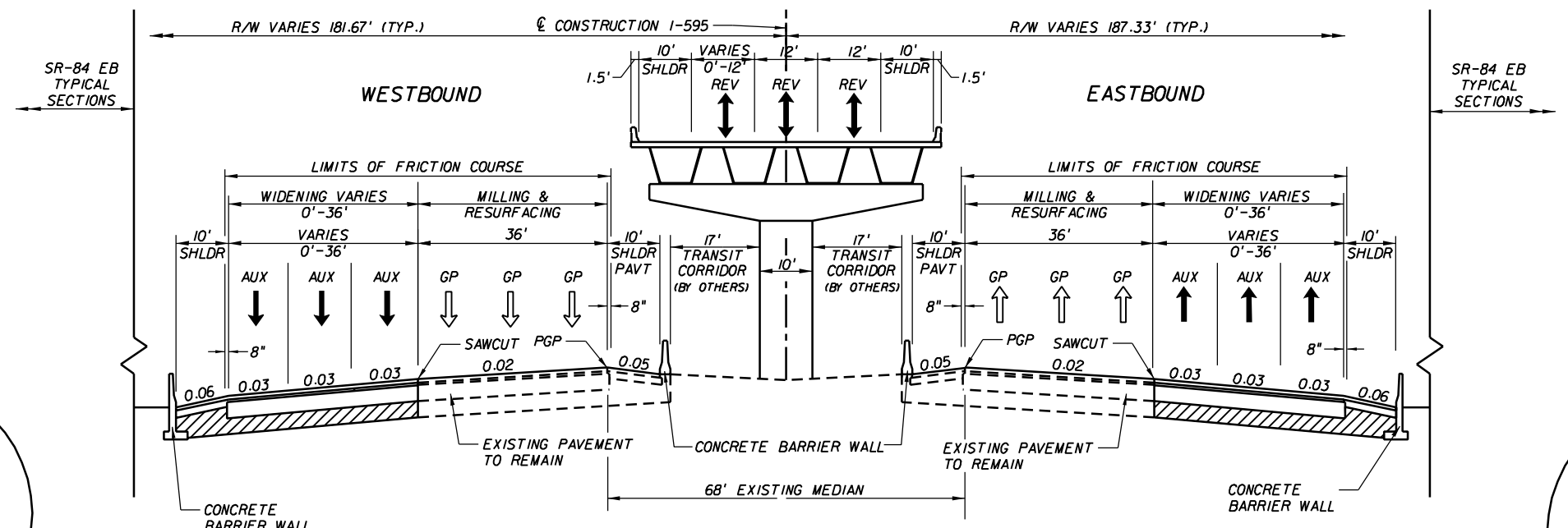

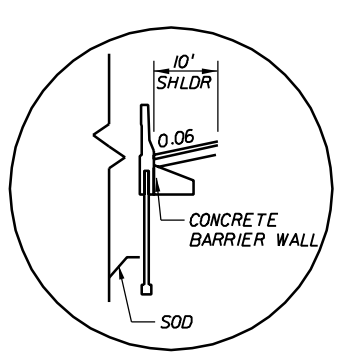

HIGH FILL SECTION

I-595 (SR-862) ALTERNATIVE 2A
FROM UNIVERSITY DR. TO EAST OF FLORIDA'S TURNPIKE
(68' EXISTING MEDIAN)

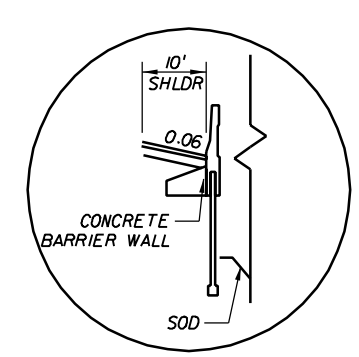

HIGH FILL SECTION

REVISIONS					
DATE	BY	DESCRIPTION	DATE	BY	DESCRIPTION

RS&H
Reynolds, Smith and Hills, Inc.
300 S. Pine Island Road, Suite 300
Plantation, Florida 33324-2619
954-474-3005
FL Cert. No. EB0005620
Phil Schwab, P.E. No. 47555

STATE OF FLORIDA
DEPARTMENT OF TRANSPORTATION

ROAD NO.	COUNTY	FINANCIAL PROJECT ID
862	BROWARD	409354-1-22-01

ALTERNATIVE 2A TYPICAL SECTIONS

SHEET NO. 18

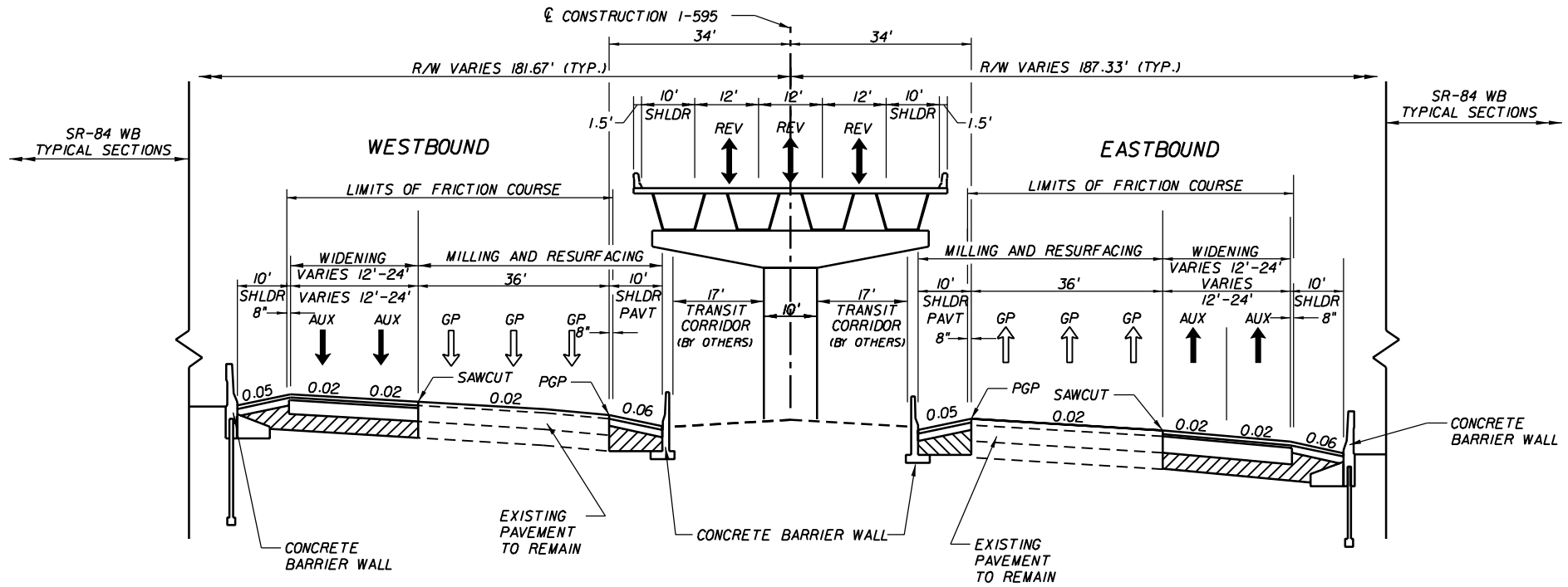

I-595 (SR-862) ALTERNATIVE 2A
SUPERELEVATED SECTION
AT UNIVERSITY DR.

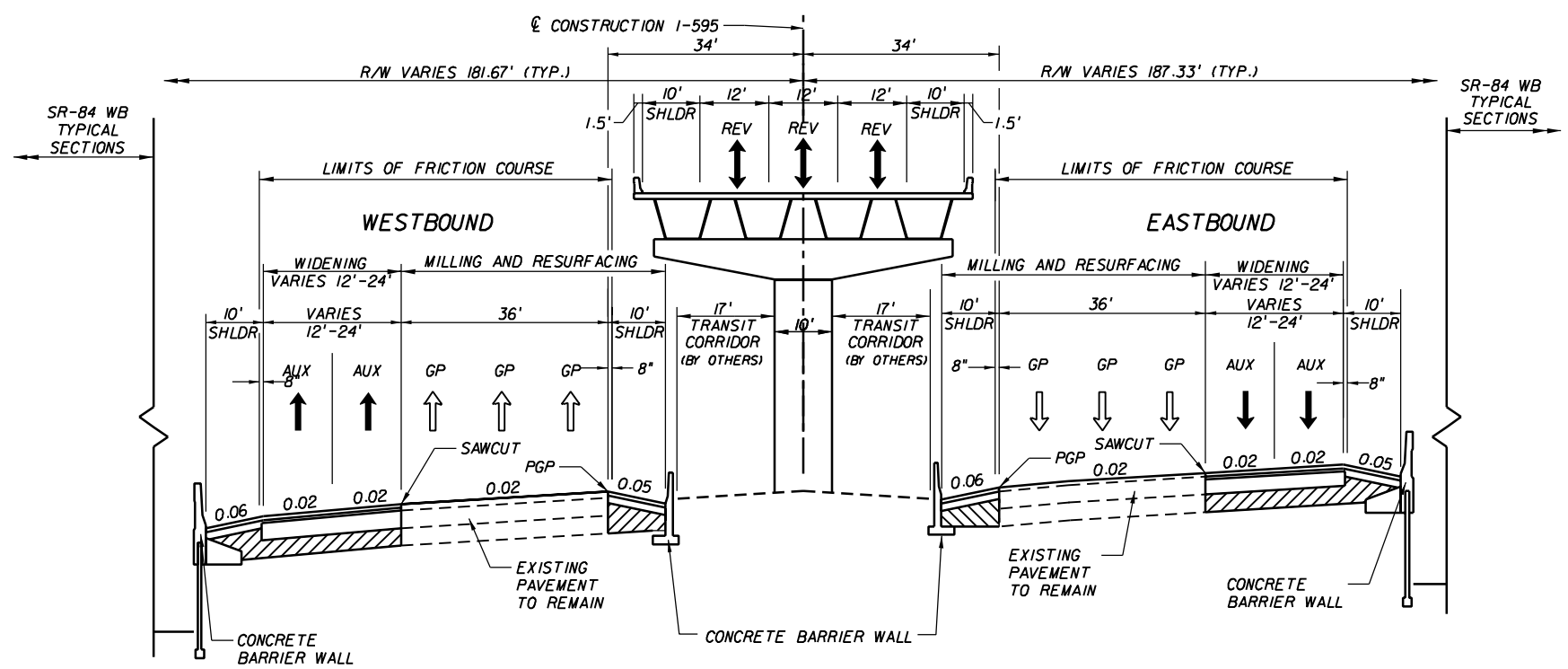

I-595 (SR-862) ALTERNATIVE 2A
SUPERELEVATED SECTION
AT UNIVERSITY DR.

REVISIONS					
DATE	BY	DESCRIPTION	DATE	BY	DESCRIPTION

RS&H
Reynolds, Smith and Hills, Inc.
300 S. Pine Island Road, Suite 300
Plantation, Florida 33324-2619
954-474-3005
FL Cert. No. EB0005620
Phil Schwab, P.E. No. 47555

STATE OF FLORIDA
DEPARTMENT OF TRANSPORTATION

ROAD NO.	COUNTY	FINANCIAL PROJECT ID
862	BROWARD	409354-1-22-01

ALTERNATIVE 2A TYPICAL SECTIONS

SHEET NO. 19

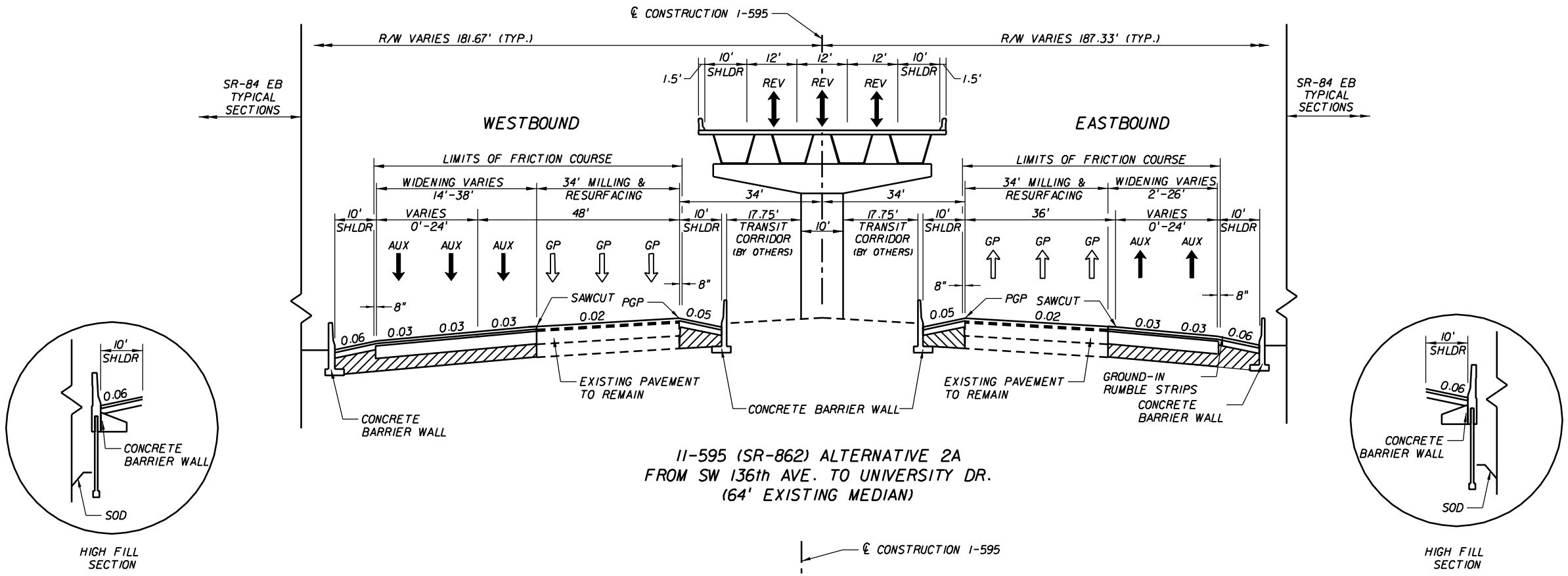

I1-595 (SR-862) ALTERNATIVE 2A
FROM SW 136th AVE. TO UNIVERSITY DR.
(64' EXISTING MEDIAN)

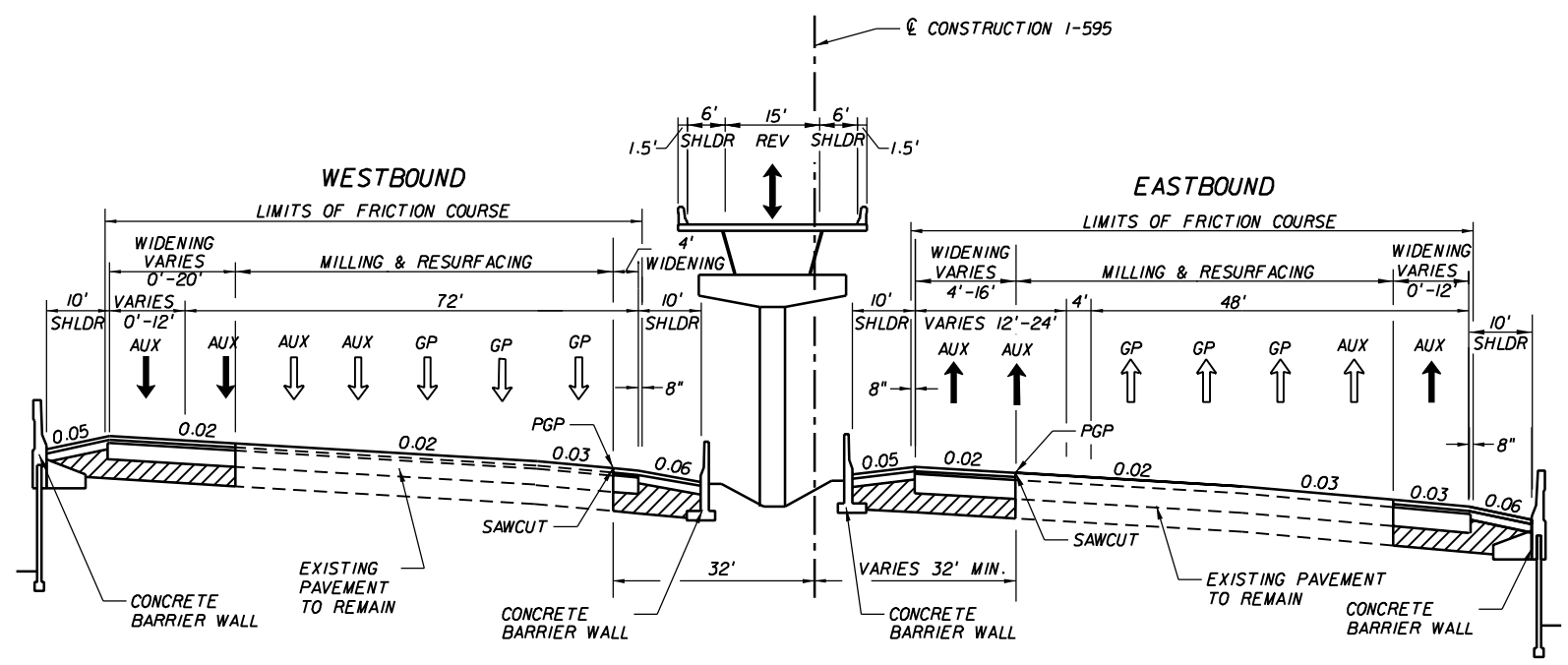

I-595 (SR-862) ALTERNATIVE 2A
SUPERELEVATED SECTION
AT SW 136TH AVE.

REVISIONS					
DATE	BY	DESCRIPTION	DATE	BY	DESCRIPTION

RS&H
Reynolds, Smith and Hills, Inc.
300 S. Pine Island Road, Suite 300
Plantation, Florida 33324-2619
954-474-3005
FL Cert. No. EB0005620
Phil Schwab, P.E. No. 47555

STATE OF FLORIDA
DEPARTMENT OF TRANSPORTATION

ROAD NO.	COUNTY	FINANCIAL PROJECT ID
862	BROWARD	409354-1-22-01

ALTERNATIVE 2A TYPICAL SECTIONS

SHEET NO. 20

2/14/2006 3:05:35 PM x:\projects\II14553000\roadway\PE Report\typsrd02a.dgn

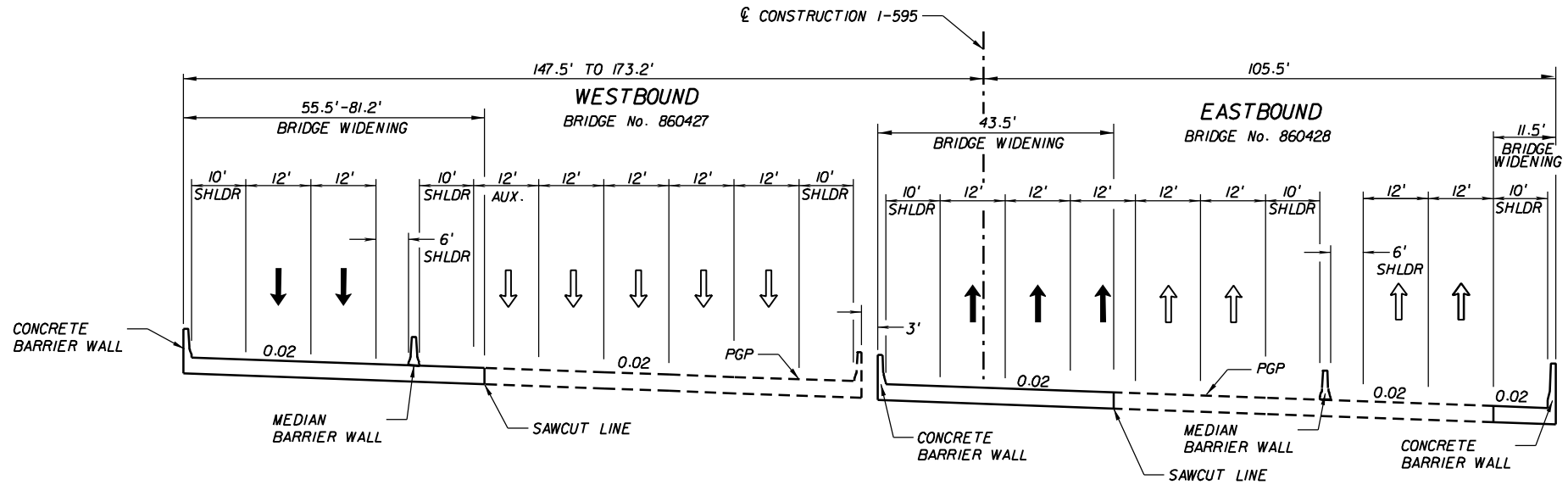

I-595 (SR-862) ALTERNATIVE 2A
BRIDGES OVER POND APPLE SLOUGH
(SUPERELEVATED SECTION)

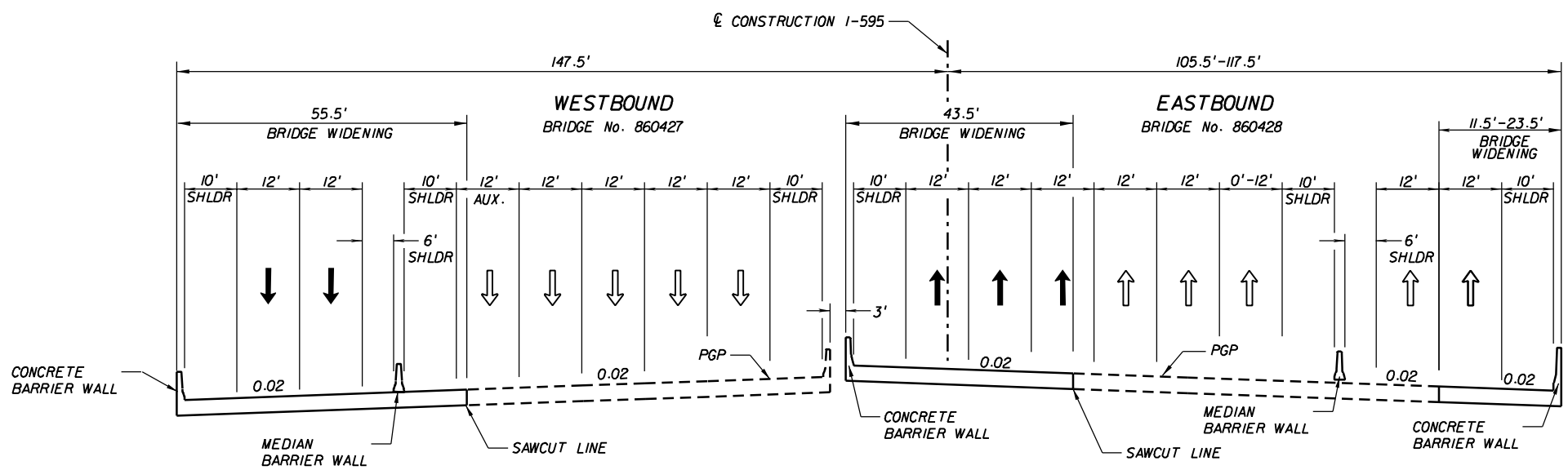

I-595 (SR-862) ALTERNATIVE 2A
BRIDGES OVER POND APPLE SLOUGH

REVISIONS					
DATE	BY	DESCRIPTION	DATE	BY	DESCRIPTION

RS&H
Reynolds, Smith and Hills, Inc.
300 S. Pine Island Road, Suite 300
Plantation, Florida 33324-2619
954-474-3005
FL Cert. No. EB0005620
Phil Schwab, P.E. No. 47555

STATE OF FLORIDA
DEPARTMENT OF TRANSPORTATION

ROAD NO.	COUNTY	FINANCIAL PROJECT ID
862	BROWARD	409354-1-22-01

ALTERNATIVE 2A
TYPICAL SECTIONS

SHEET NO.
21

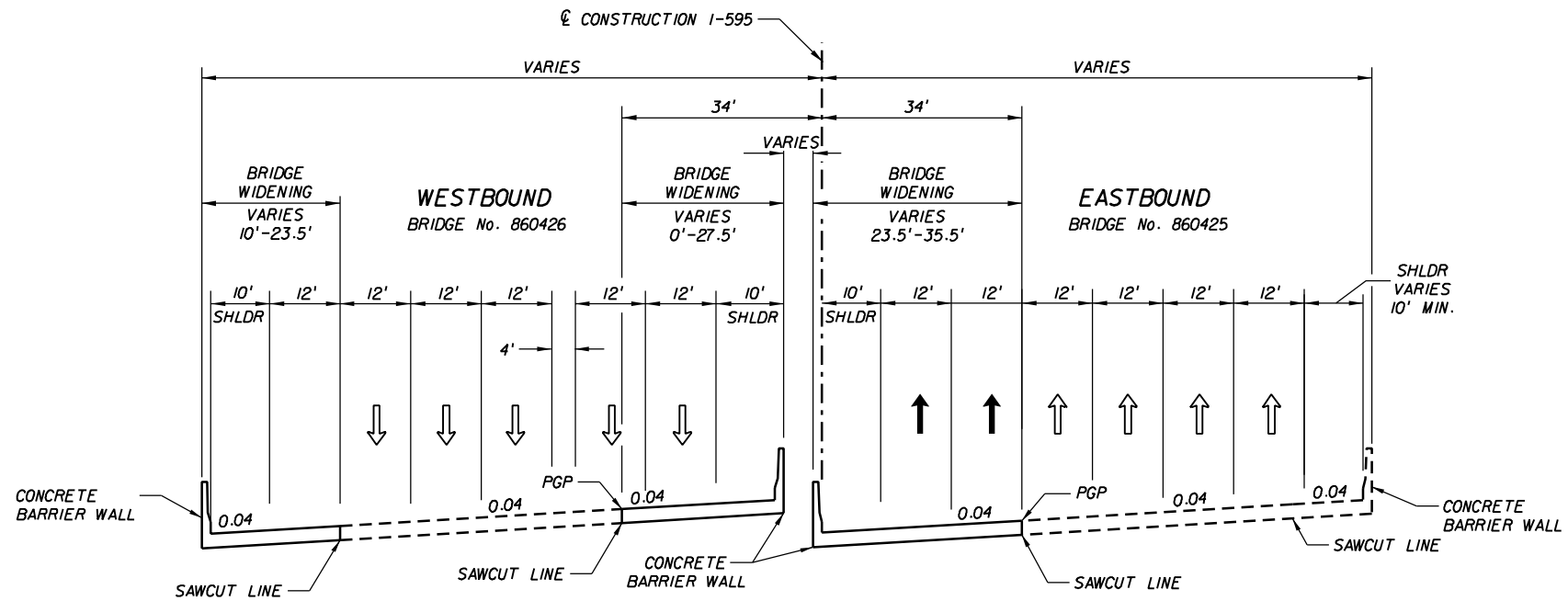

I-595 (SR-862) ALTERNATIVES IA, IB, 2A, 2B
BRIDGES OVER RAMPS TH & K

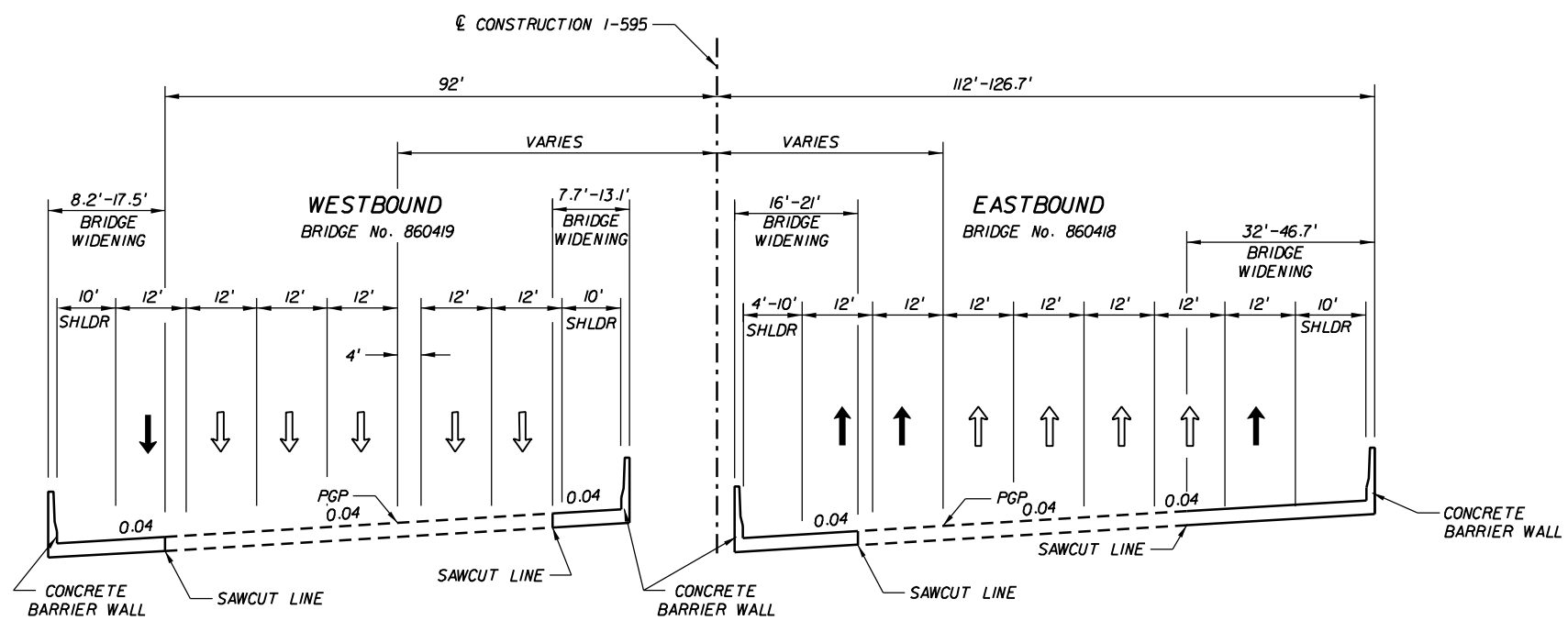

I-595 (SR-862) ALTERNATIVES IA, IB, 2A, 2B
BRIDGES OVER SR-7 (US-441)

REVISIONS					
DATE	BY	DESCRIPTION	DATE	BY	DESCRIPTION

RS&H
Reynolds, Smith and Hills, Inc.
300 S. Pine Island Road, Suite 300
Plantation, Florida 33324-2619
954-474-3005
FL Cert. No. EB0005620
Phil Schwab, P.E. No. 47555

STATE OF FLORIDA
DEPARTMENT OF TRANSPORTATION

ROAD NO.	COUNTY	FINANCIAL PROJECT ID
862	BROWARD	409354-1-22-01

ALTERNATIVE 2A
TYPICAL SECTIONS

SHEET NO.
22

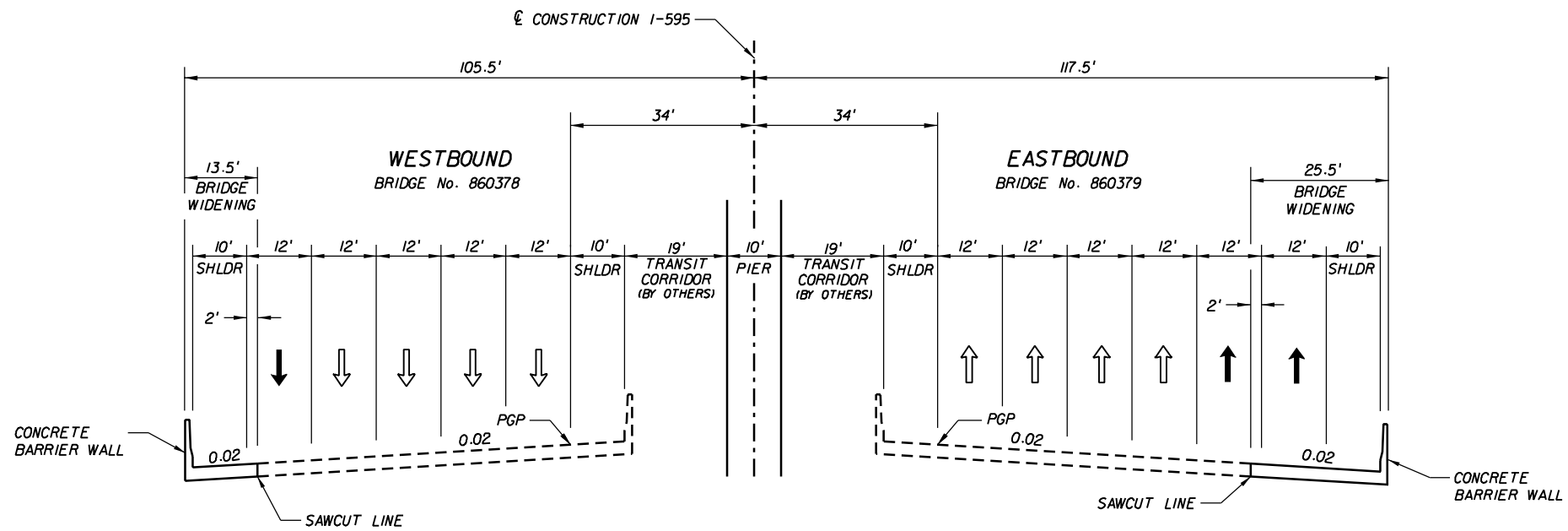

I-595 (SR-862) ALTERNATIVE 2A
BRIDGES OVER DAVIE ROAD

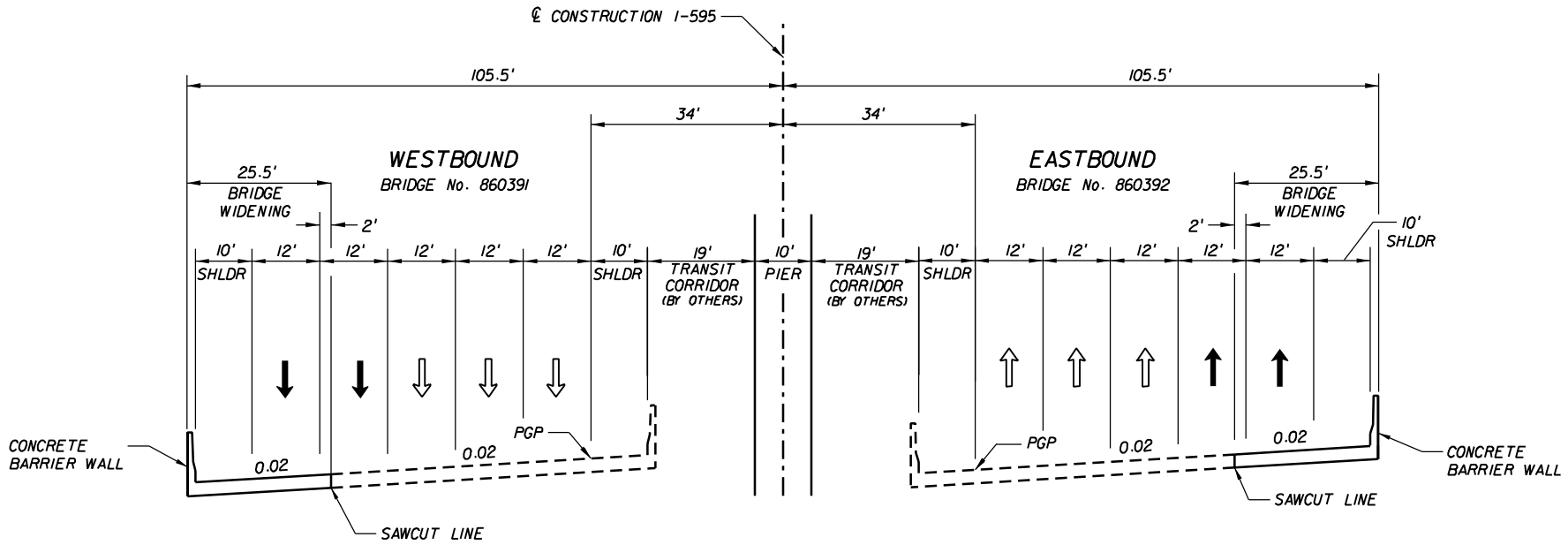

I-595 (SR-862) ALTERNATIVE 2A
BRIDGES OVER UNIVERSITY DRIVE

REVISIONS					
DATE	BY	DESCRIPTION	DATE	BY	DESCRIPTION

RS&H
Reynolds, Smith and Hills, Inc.
300 S. Pine Island Road, Suite 300
Plantation, Florida 33324-2619
954-474-3005
FL Cert. No. EB0005620
Phil Schwab, P.E. No. 47555

STATE OF FLORIDA
DEPARTMENT OF TRANSPORTATION

ROAD NO.	COUNTY	FINANCIAL PROJECT ID
862	BROWARD	409354-1-22-01

ALTERNATIVE 2A TYPICAL SECTIONS

SHEET NO. 23

2/14/2006 3:06:06 PM x:\projects\II\4553000\roadway\PE Report\typsrd02a.dgn

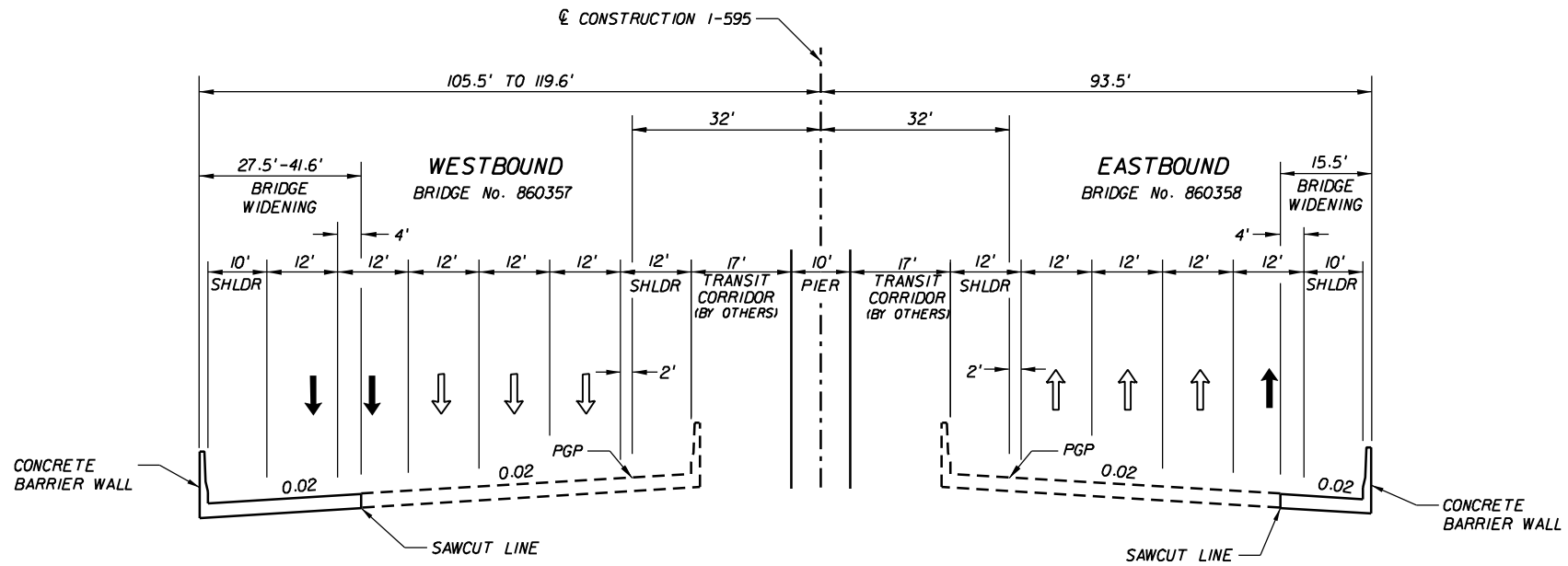

I-595 (SR-862) ALTERNATIVE 2A
BRIDGES OVER PINE ISLAND ROAD

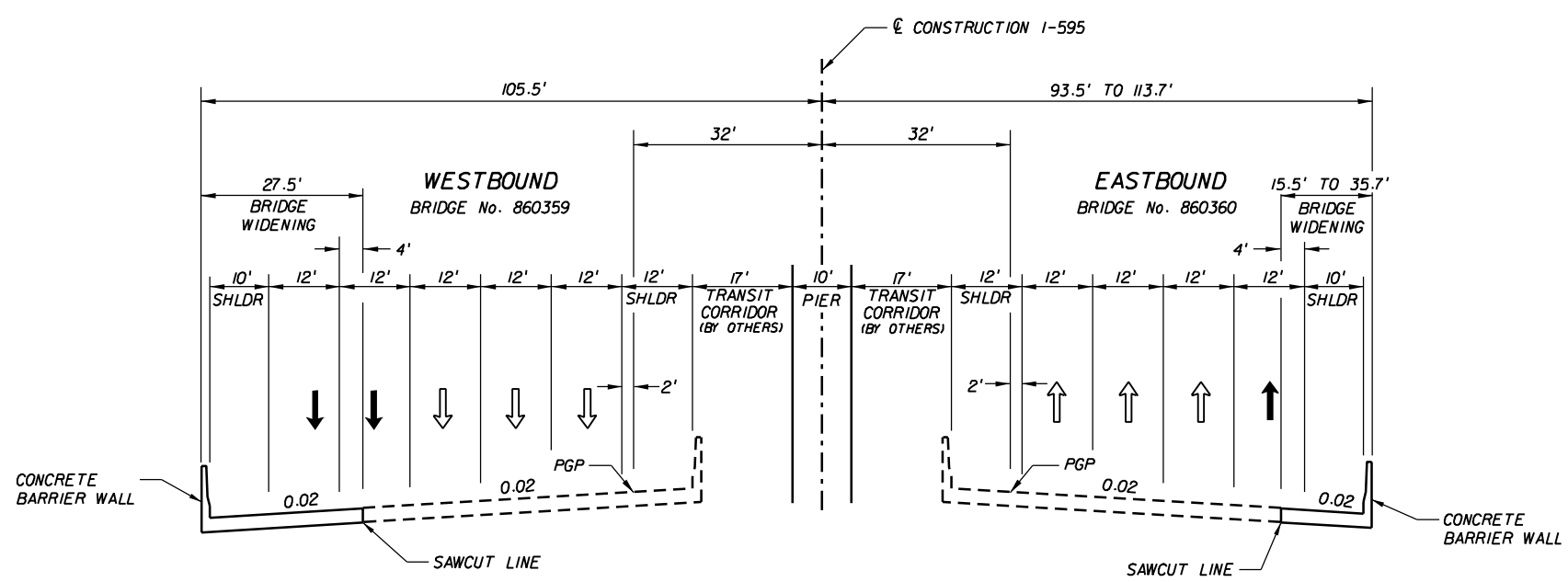

I-595 (SR-862) ALTERNATIVE 2A
BRIDGES OVER NOB HILL ROAD

REVISIONS					
DATE	BY	DESCRIPTION	DATE	BY	DESCRIPTION

RS&H
Reynolds, Smith and Hills, Inc.
300 S. Pine Island Road, Suite 300
Plantation, Florida 33324-2619
954-474-3005
FL Cert. No. EB0005620
Phil Schwab, P.E. No. 47555

STATE OF FLORIDA
DEPARTMENT OF TRANSPORTATION

ROAD NO.	COUNTY	FINANCIAL PROJECT ID
862	BROWARD	409354-1-22-01

ALTERNATIVE 2A TYPICAL SECTIONS

SHEET NO. 24

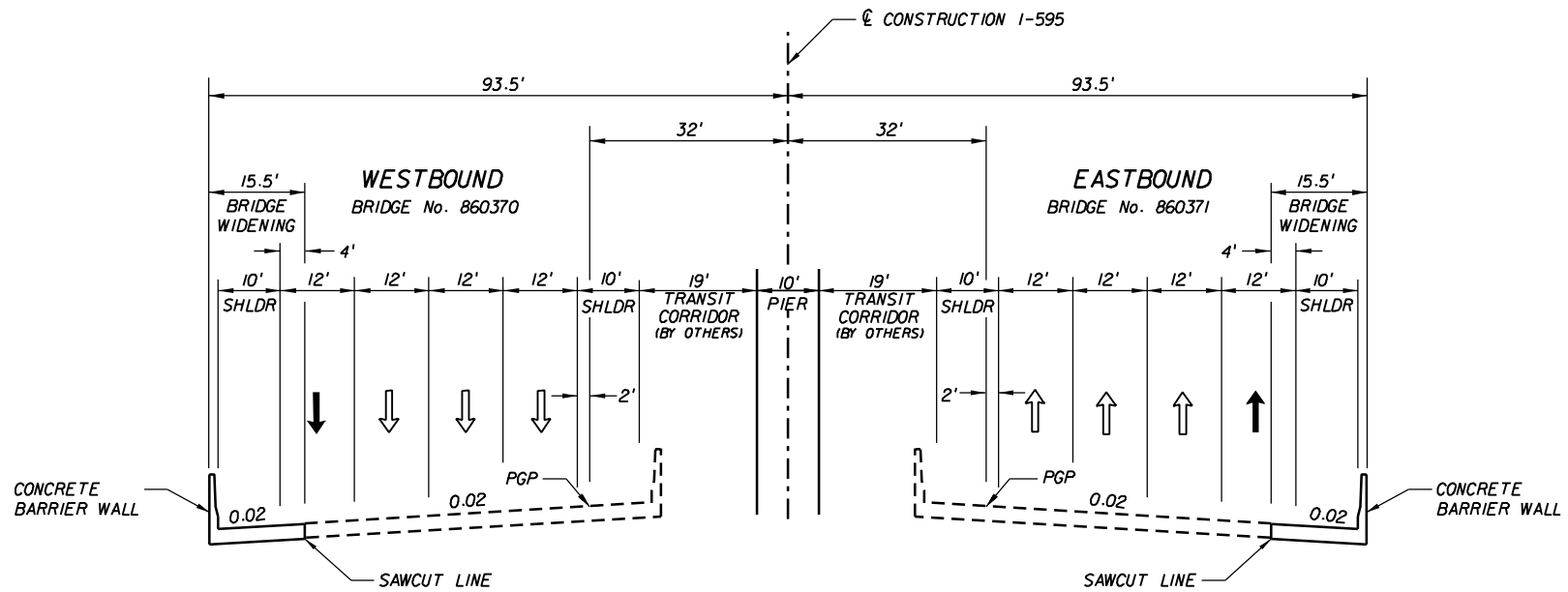

I-595 (SR-862) ALTERNATIVE 2A
BRIDGES OVER HIATUS ROAD

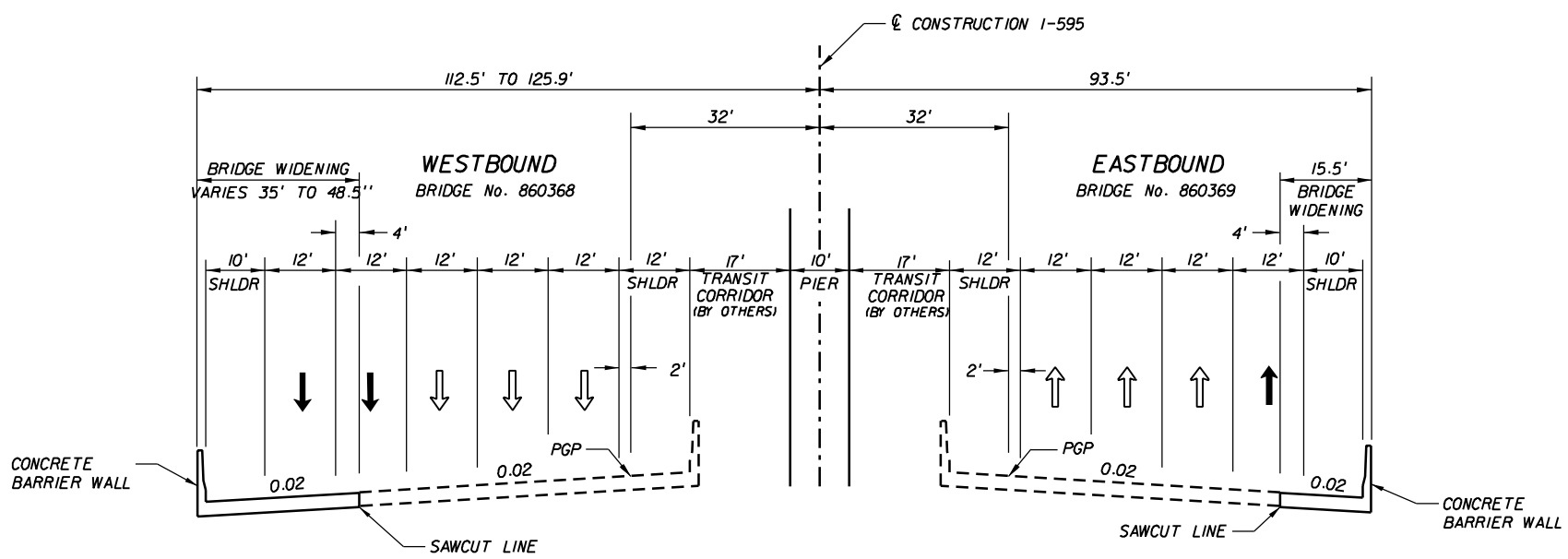

I-595 (SR-862) ALTERNATIVE 2A
BRIDGES OVER FLAMINGO ROAD

REVISIONS					
DATE	BY	DESCRIPTION	DATE	BY	DESCRIPTION

RS&H
Reynolds, Smith and Hills, Inc.
300 S. Pine Island Road, Suite 300
Plantation, Florida 33324-2619
954-474-3005
FL Cert. No. EB0005620
Phil Schwab, P.E. No. 47555

STATE OF FLORIDA
DEPARTMENT OF TRANSPORTATION

ROAD NO.	COUNTY	FINANCIAL PROJECT ID
862	BROWARD	409354-1-22-01

ALTERNATIVE 2A TYPICAL SECTIONS

SHEET NO. 25

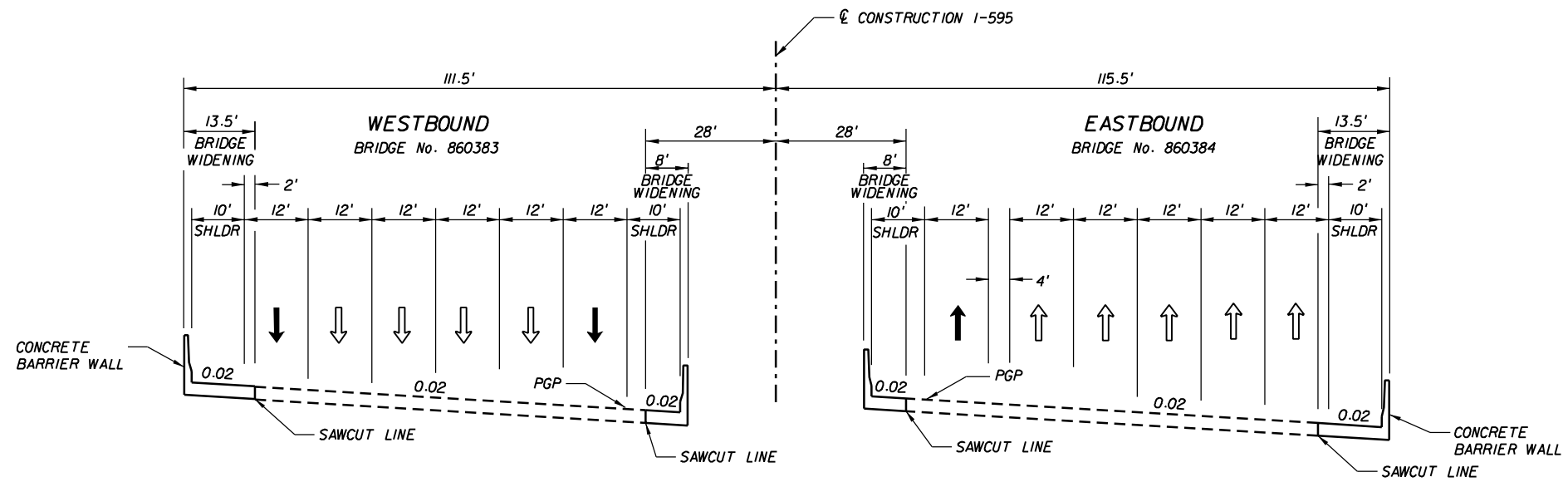

I-595 (SR-862) ALTERNATIVES 1A, 1B, 2A, 2B
BRIDGES OVER SW 136TH STREET

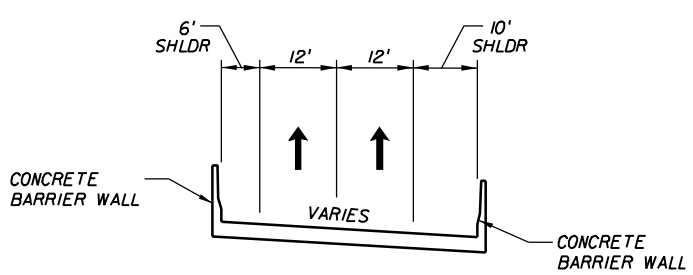

2 LANE BRIDGE STRUCTURE

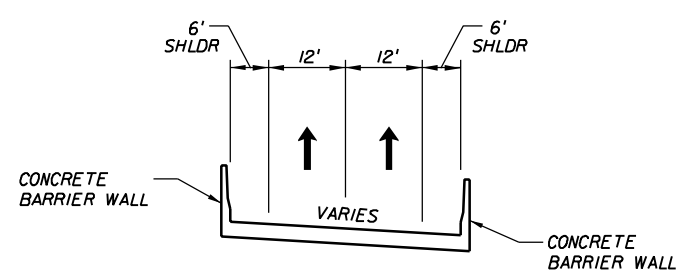

2 LANE BRIDGE STRUCTURE
WITH REDUCED OUTSIDE SHOULDER

FLAMINGO ROAD WB OFF RAMP
PINE ISLAND ROAD EB OFF RAMP
NOB HILL ROAD WB OFF RAMP
UNIVERSITY DRIVE WB OFF RAMP

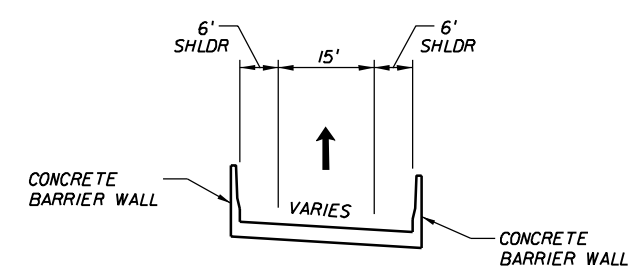

1 LANE BRIDGE STRUCTURE

HIATUS ROAD EB BYPASS RAMPS
PINE ISLAND ROAD EB BYPASS RAMP
UNIVERSITY DRIVE FLYOVER RAMPS
DAVIE ROAD EB RAMP
NOB HILL ROAD WB ON RAMP

REVISIONS					
DATE	BY	DESCRIPTION	DATE	BY	DESCRIPTION

RS&H
Reynolds, Smith and Hills, Inc.
300 S. Pine Island Road, Suite 300
Plantation, Florida 33324-2619
954-474-3005
FL Cert. No. EB0005620
Phil Schwab, P.E. No. 47555

STATE OF FLORIDA
DEPARTMENT OF TRANSPORTATION

ROAD NO.	COUNTY	FINANCIAL PROJECT ID
862	BROWARD	409354-1-22-01

ALTERNATIVE 2A
TYPICAL SECTIONS

SHEET NO.
26

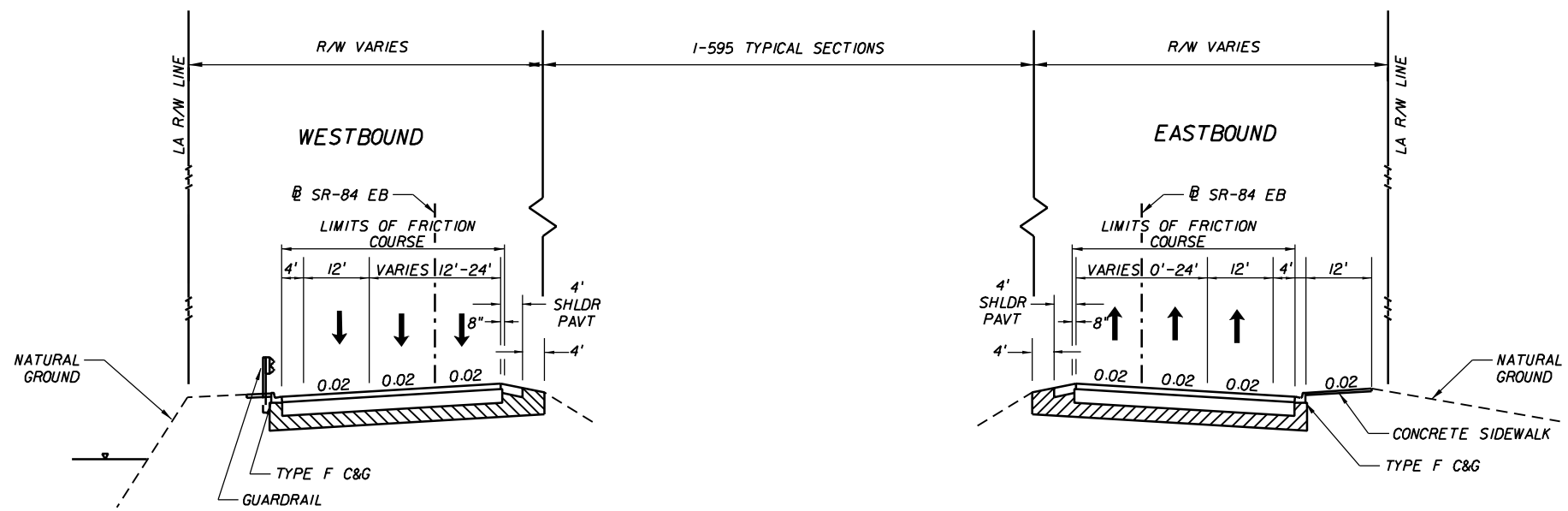

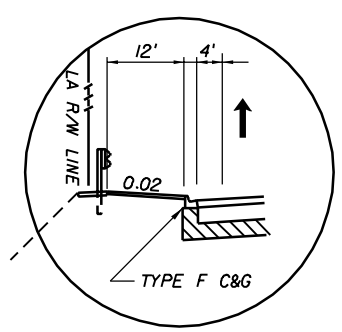

WITH ADJACENT MIXED USE BIKE PATH (DAVIE RD. TO SR-7)

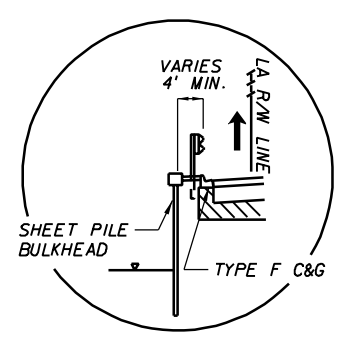

BULKHEAD SECTION (INSIDE SFWMD R/W)

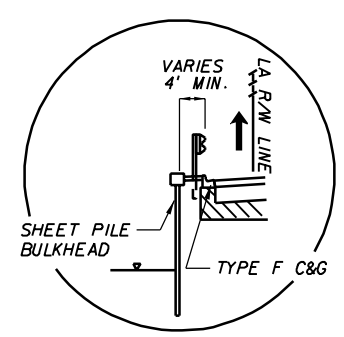

BULKHEAD SECTION WITH 8' NOISE WALL (INSIDE SFWMD R/W)

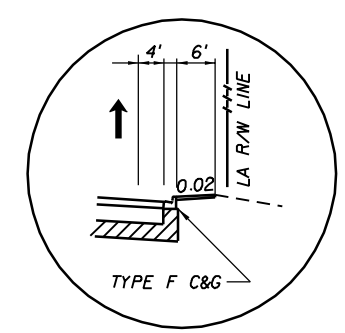

WITH ADJACENT 6' SIDEWALK (UNIVERSITY DR. TO DAVIE RD.)

REVISIONS					
DATE	BY	DESCRIPTION	DATE	BY	DESCRIPTION

RS&H
Reynolds, Smith and Hills, Inc.
300 S. Pine Island Road, Suite 300
Plantation, Florida 33324-2619
954-474-3005
FL Cert. No. EB0005620
Phil Schwab, P.E. No. 47555

STATE OF FLORIDA
DEPARTMENT OF TRANSPORTATION

ROAD NO.	COUNTY	FINANCIAL PROJECT ID
862	BROWARD	409354-1-22-01

ALTERNATIVE 2A TYPICAL SECTIONS

SHEET NO. 27

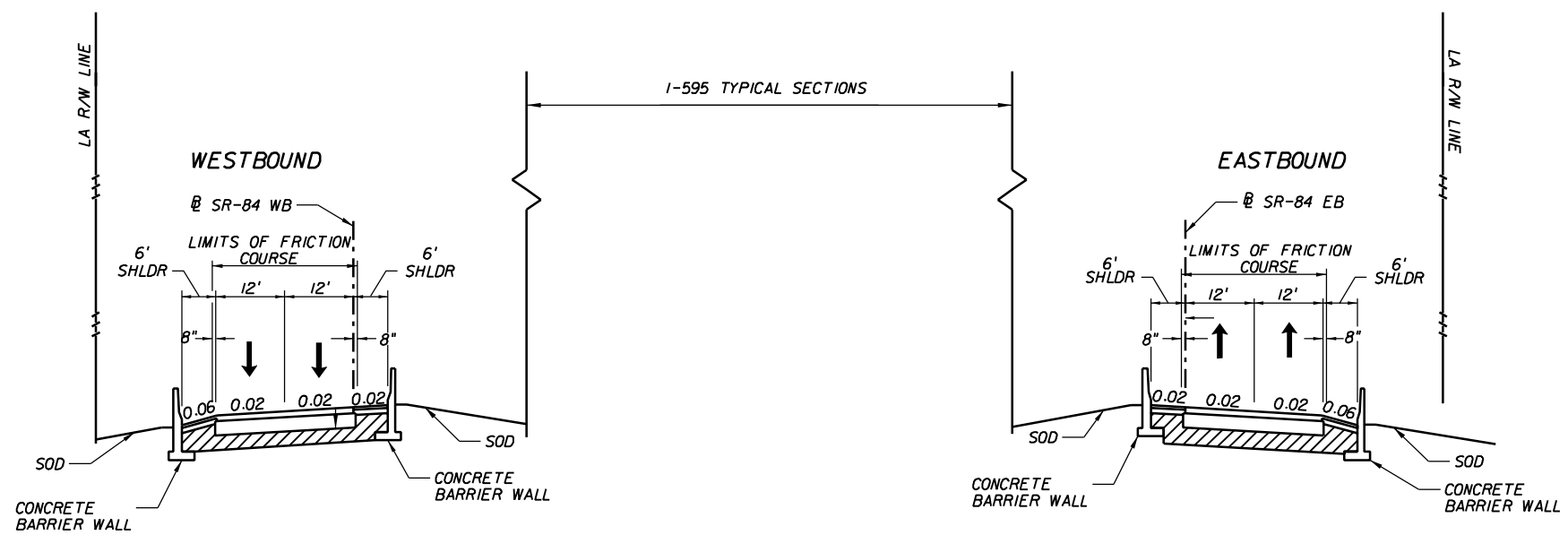

SR-84
WITH REDUCED OUTSIDE SHOULDER AT RAMP BRAIDS

REVISIONS					
DATE	BY	DESCRIPTION	DATE	BY	DESCRIPTION

RS&H
Reynolds, Smith and Hills, Inc.
300 S. Pine Island Road, Suite 300
Plantation, Florida 33324-2619
954-474-3005
FL Cert. No. EB0005620
Phil Schwab, P.E. No. 47555

STATE OF FLORIDA
DEPARTMENT OF TRANSPORTATION

ROAD NO.	COUNTY	FINANCIAL PROJECT ID
862	BROWARD	409354-1-22-01

ALTERNATIVE 2A
TYPICAL SECTIONS

SHEET NO.
28

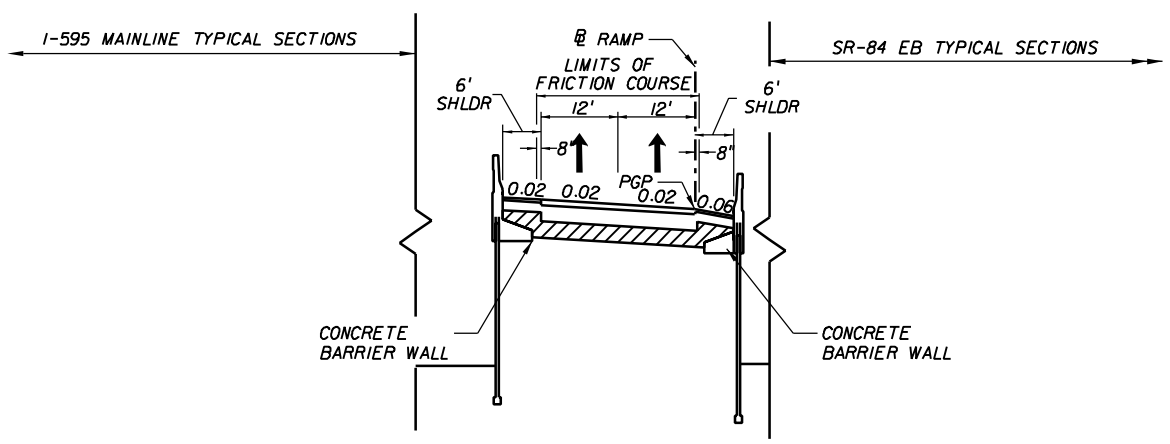

2 LANE RAMP
ON WALL WITH REDUCED OUTSIDE SHOULDER AT RAMP BRAIDS

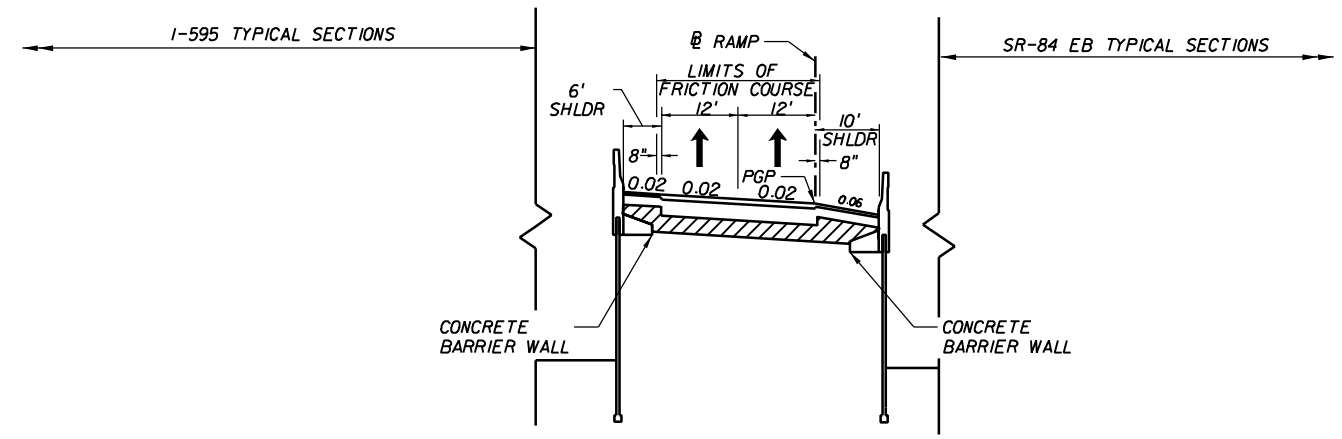

2 LANE RAMP ON WALL

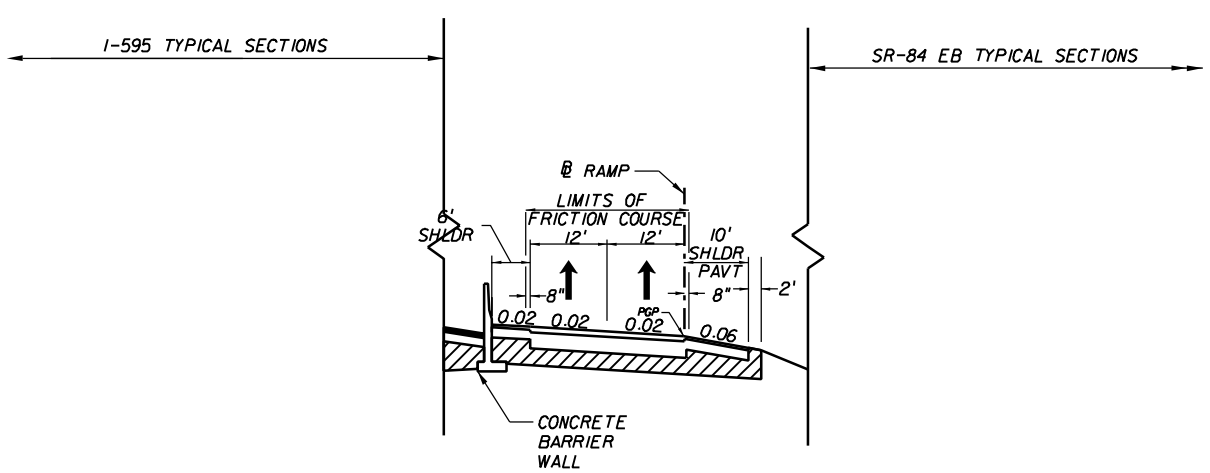

2 LANE RAMP
WITH FLUSH OUTSIDE SHOULDER

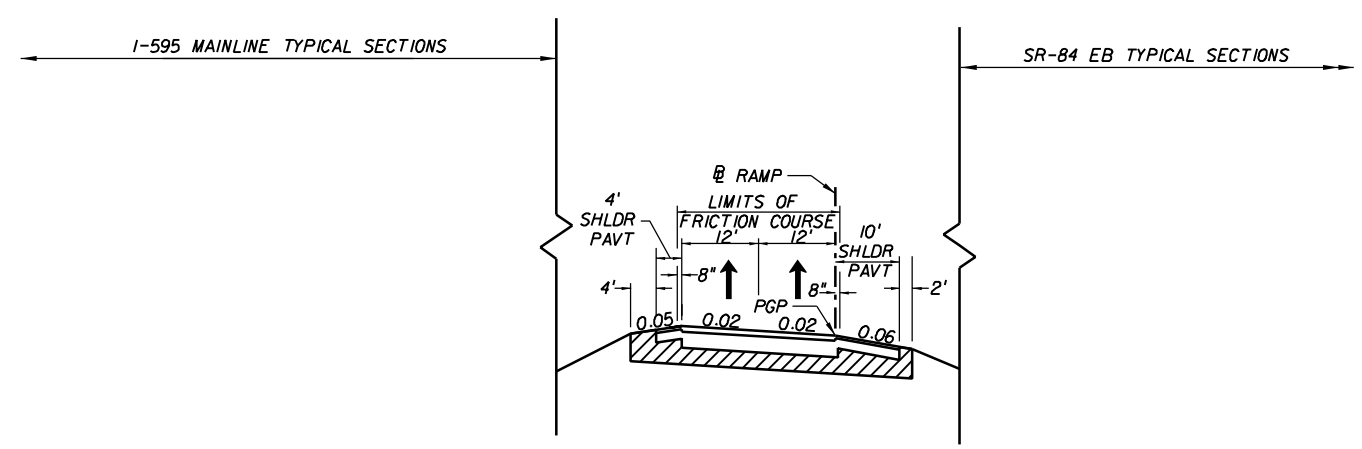

2 LANE RAMP
WITH FLUSH SHOULDERS

REVISIONS					
DATE	BY	DESCRIPTION	DATE	BY	DESCRIPTION

RS&H
Reynolds, Smith and Hills, Inc.
300 S. Pine Island Road, Suite 300
Plantation, Florida 33324-2619
954-474-3005
FL Cert. No. EB0005620
Phil Schwab, P.E. No. 47555

STATE OF FLORIDA
DEPARTMENT OF TRANSPORTATION

ROAD NO.	COUNTY	FINANCIAL PROJECT ID
862	BROWARD	409354-1-22-01

ALTERNATIVE 2A TYPICAL SECTIONS

SHEET NO.
29

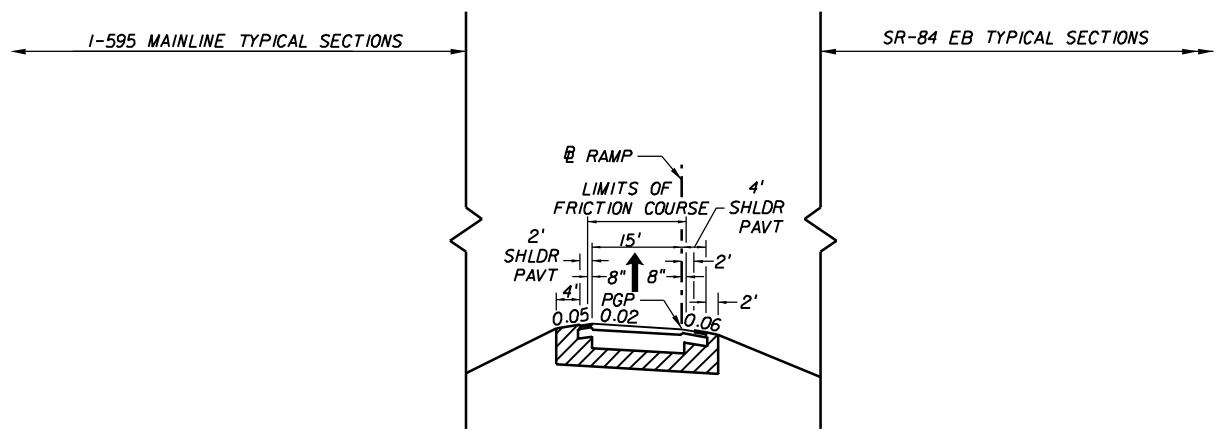

I LANE RAMP
WITH FLUSH SHOULDERS

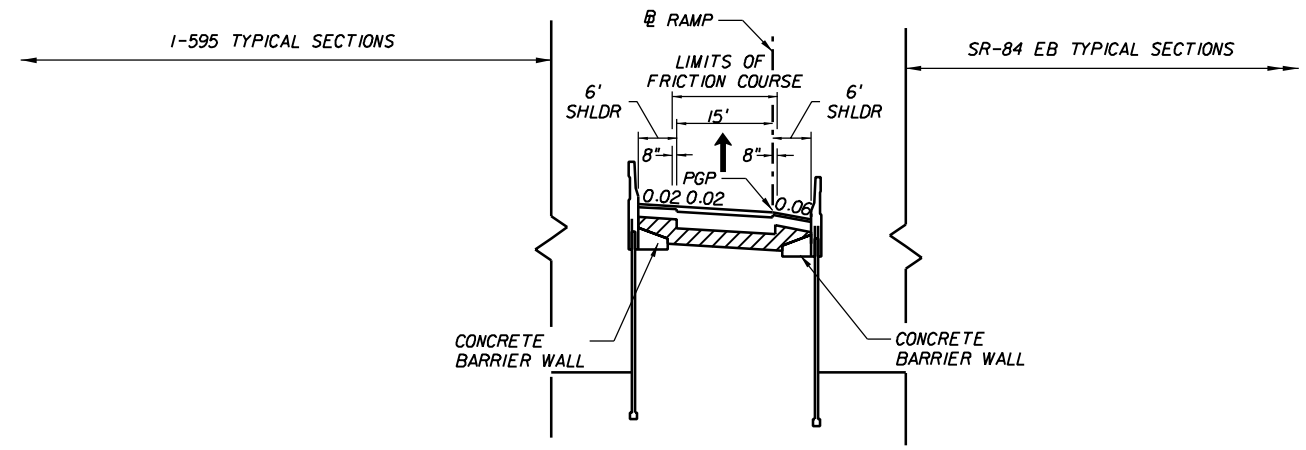

I LANE RAMP ON WALL

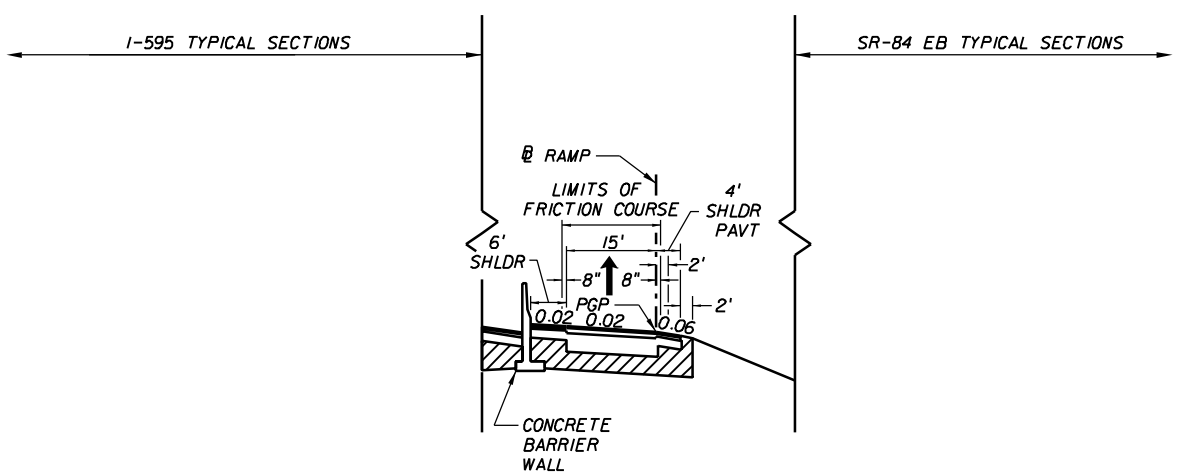

I LANE RAMP
WITH FLUSH OUTSIDE SHOULDER

REVISIONS					
DATE	BY	DESCRIPTION	DATE	BY	DESCRIPTION

RS&H
Reynolds, Smith and Hills, Inc.
300 S. Pine Island Road, Suite 300
Plantation, Florida 33324-2619
954-474-3005
FL Cert. No. EB0005620
Phil Schwab, P.E. No. 47555

STATE OF FLORIDA
DEPARTMENT OF TRANSPORTATION

ROAD NO.	COUNTY	FINANCIAL PROJECT ID
862	BROWARD	409354-1-22-01

ALTERNATIVE 2A
TYPICAL SECTIONS

SHEET NO.
30

2/14/2006 3:07:27 PM x:\projects\II14553000\roadway\PE Report\typsrd02a.dgn

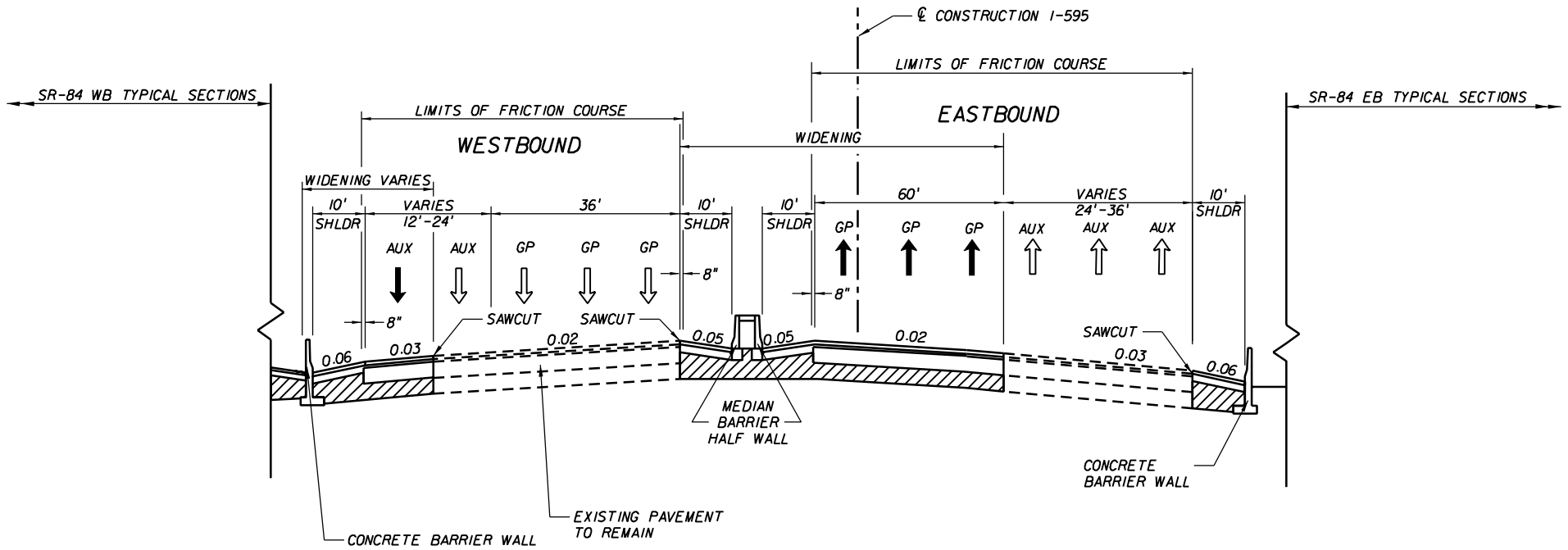

I-595 (SR-862) ALTERNATIVE 2A
NO FILL SECTION
FROM SR-7 TO VIADUCT OVER POND APPLE SLOUGH

REVISIONS					
DATE	BY	DESCRIPTION	DATE	BY	DESCRIPTION

RS&H
Reynolds, Smith and Hills, Inc.
300 S. Pine Island Road, Suite 300
Plantation, Florida 33324-2619
954-474-3005
FL Cert. No. EB0005620
Phil Schwab, P.E. No. 47555

STATE OF FLORIDA
DEPARTMENT OF TRANSPORTATION

ROAD NO.	COUNTY	FINANCIAL PROJECT ID
862	BROWARD	409354-1-22-01

ALTERNATIVE 2B
TYPICAL SECTIONS

SHEET NO.
31

2/14/2006 3:25:59 PM x:\projects\II4553000\roadway\PE Report\typsrd02b.dgn

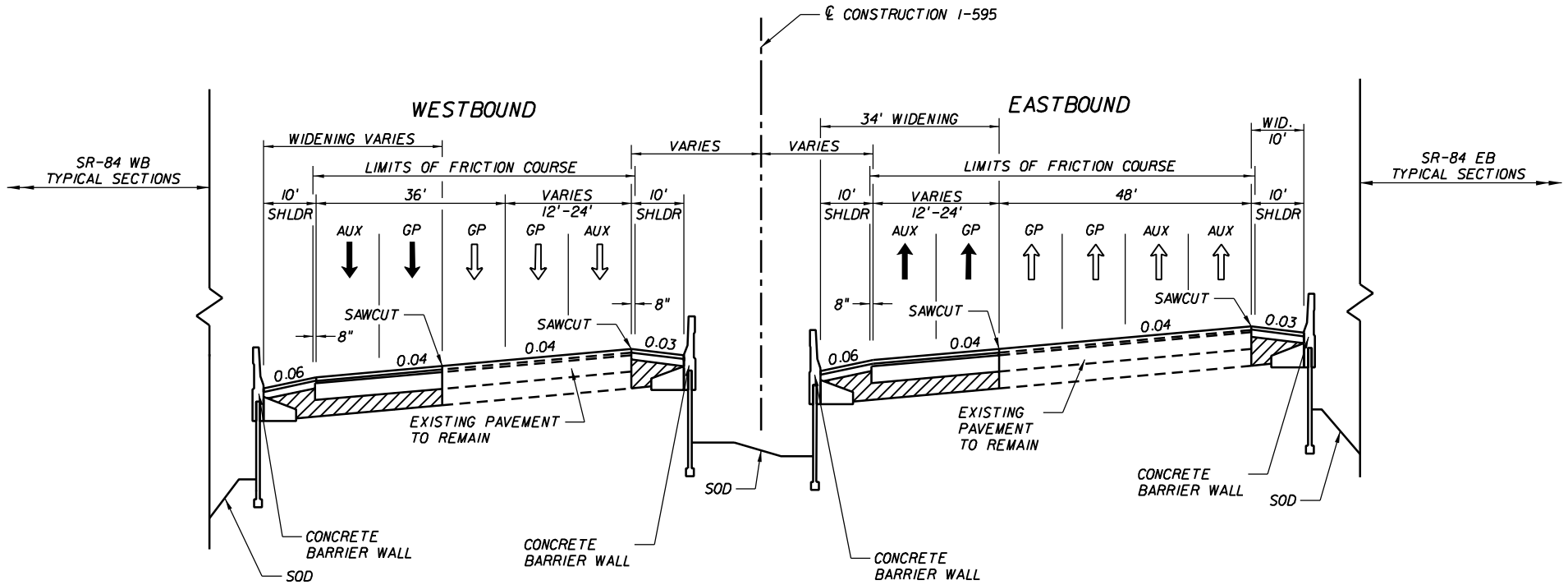

I-595 (SR-862) ALTERNATIVE 2A
SUPERELEVATED SECTION
AT SR-7

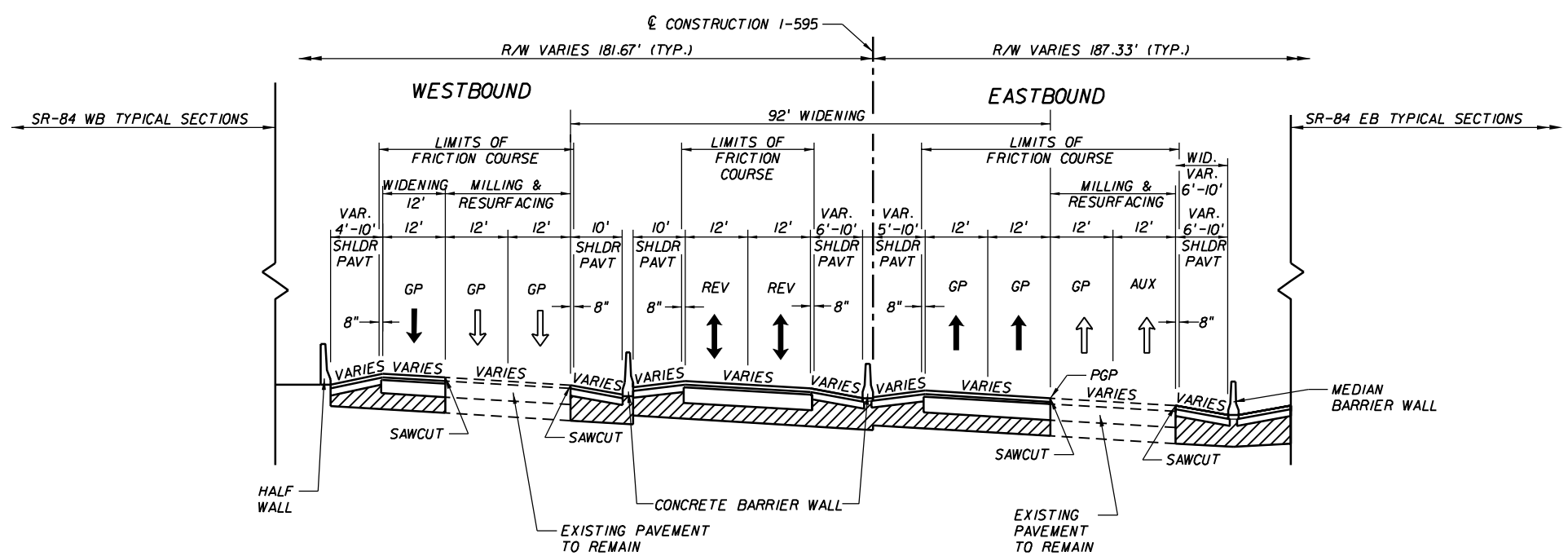

I-595 (SR-862) ALTERNATIVE 2A
SUPERELEVATED SECTION
AT FLORIDA'S TURNPIKE

REVISIONS					
DATE	BY	DESCRIPTION	DATE	BY	DESCRIPTION

RS&H
Reynolds, Smith and Hills, Inc.
300 S. Pine Island Road, Suite 300
Plantation, Florida 33324-2619
954-474-3005
FL Cert. No. EB0005620
Phil Schwab, P.E. No. 47555

STATE OF FLORIDA
DEPARTMENT OF TRANSPORTATION

ROAD NO.	COUNTY	FINANCIAL PROJECT ID
862	BROWARD	409354-1-22-01

ALTERNATIVE 2B TYPICAL SECTIONS

SHEET NO. 32

2/14/2006 3:26:57 PM x:\projects\II14553000\roadway\PE Report\typsrd02b.dgn

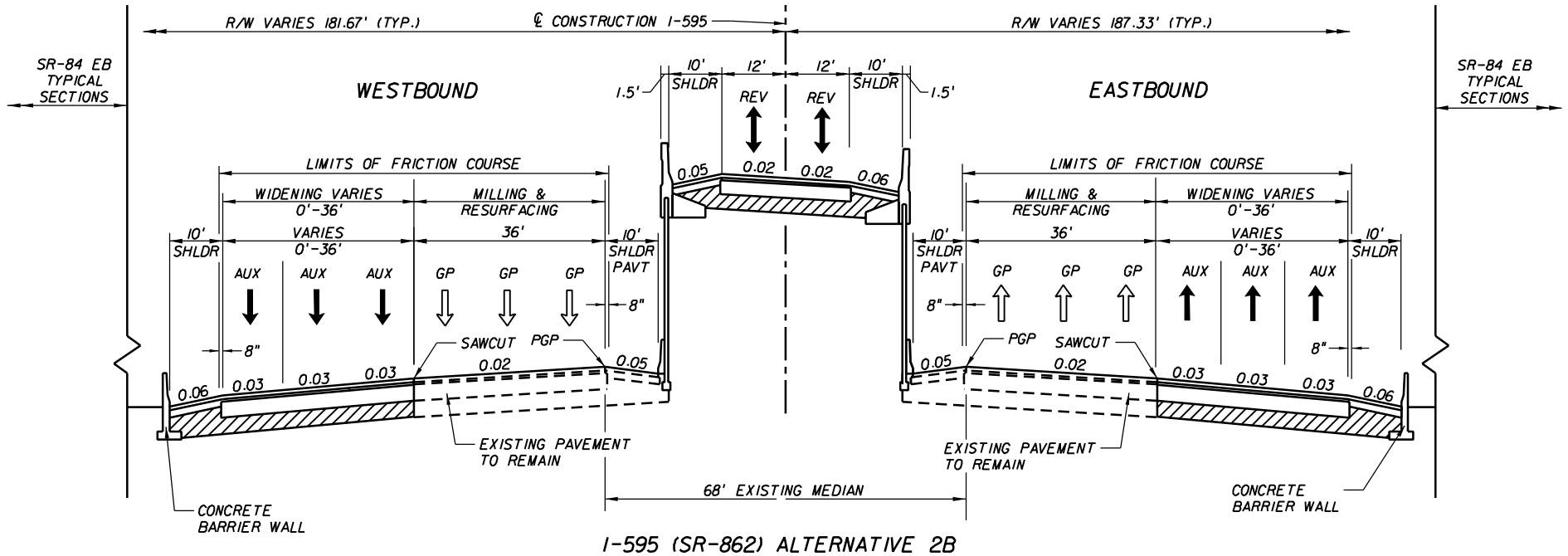

I-595 (SR-862) ALTERNATIVE 2B
SUPERELEVATED SECTION
AT FLORIDA'S TURNPIKE

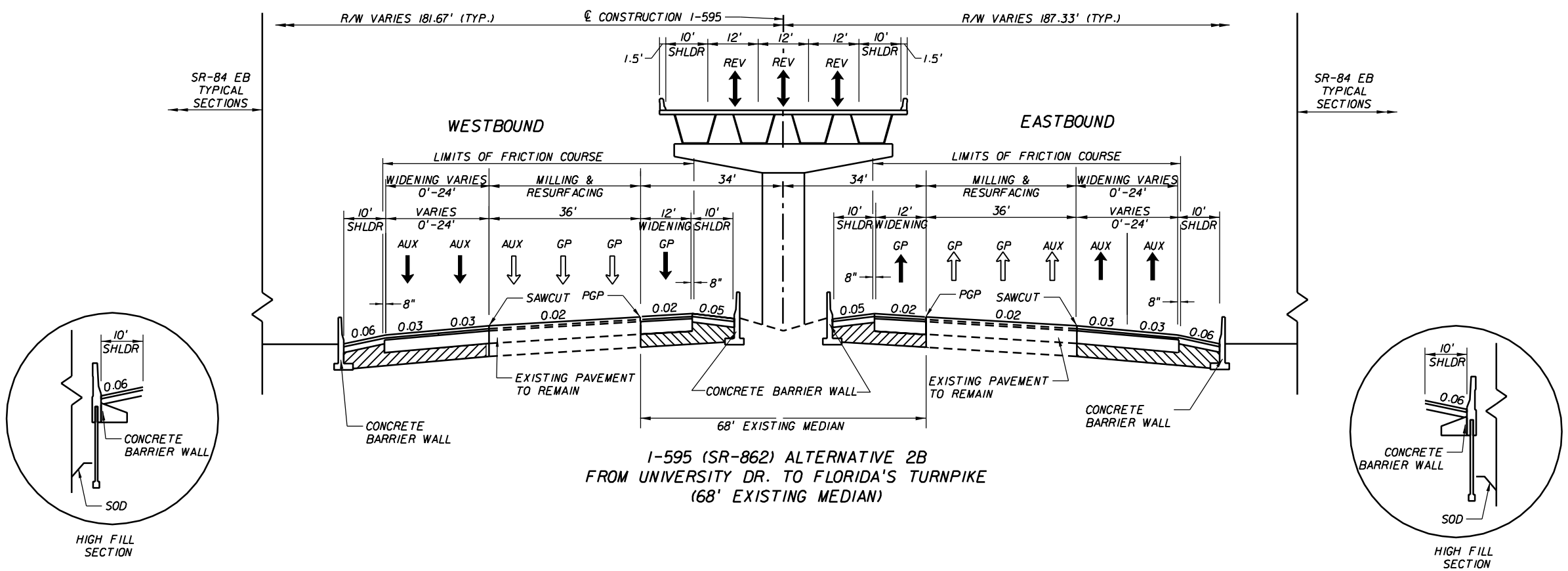

I-595 (SR-862) ALTERNATIVE 2B
FROM UNIVERSITY DR. TO FLORIDA'S TURNPIKE
(68' EXISTING MEDIAN)

REVISIONS					
DATE	BY	DESCRIPTION	DATE	BY	DESCRIPTION

RS&H
Reynolds, Smith and Hills, Inc.
300 S. Pine Island Road, Suite 300
Plantation, Florida 33324-2619
954-474-3005
FL Cert. No. EB0005620
Phil Schwab, P.E. No. 47555

STATE OF FLORIDA
DEPARTMENT OF TRANSPORTATION

ROAD NO.	COUNTY	FINANCIAL PROJECT ID
862	BROWARD	409354-1-22-01

ALTERNATIVE 2B TYPICAL SECTIONS

SHEET NO. 33

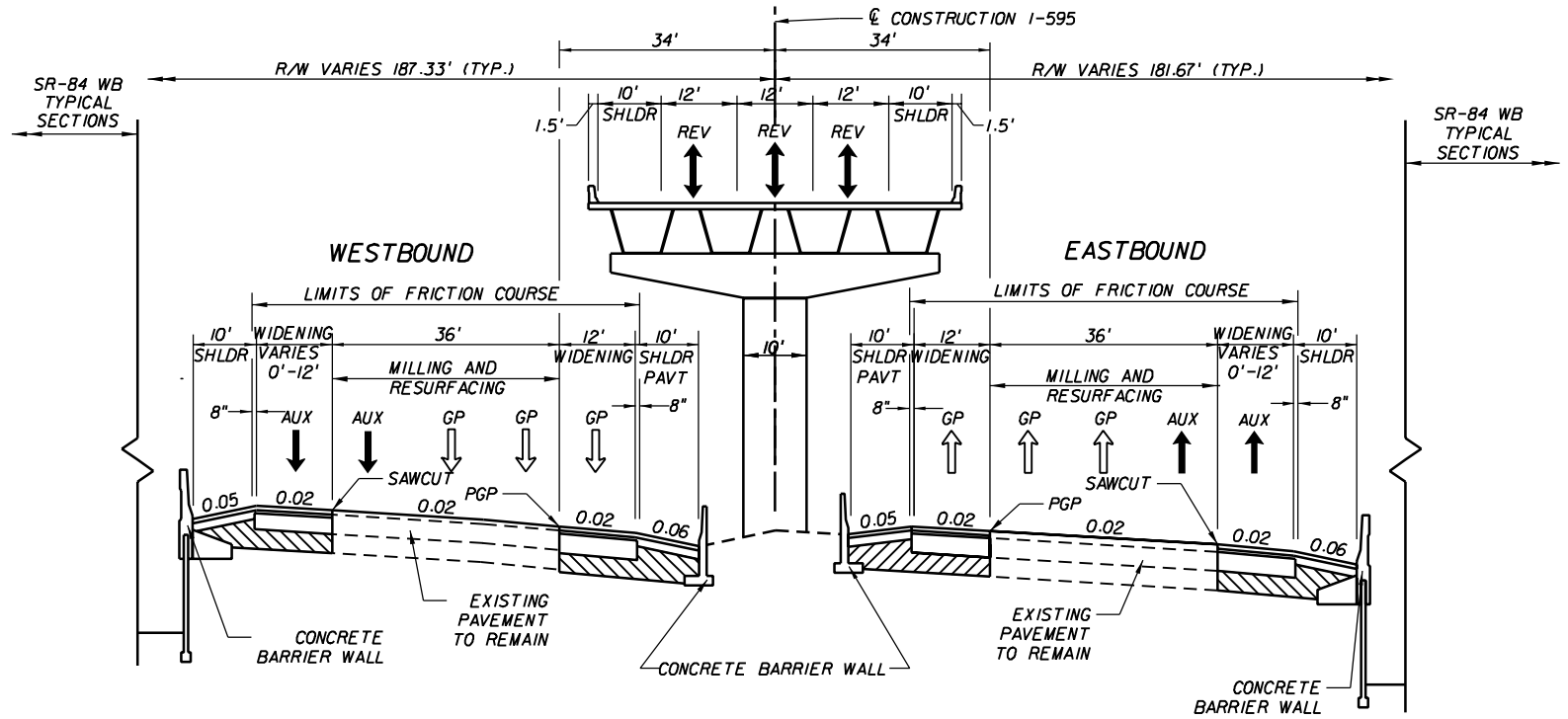

I-595 (SR-862) ALTERNATIVE 2B
SUPERELEVATED SECTION
AT UNIVERSITY DR.

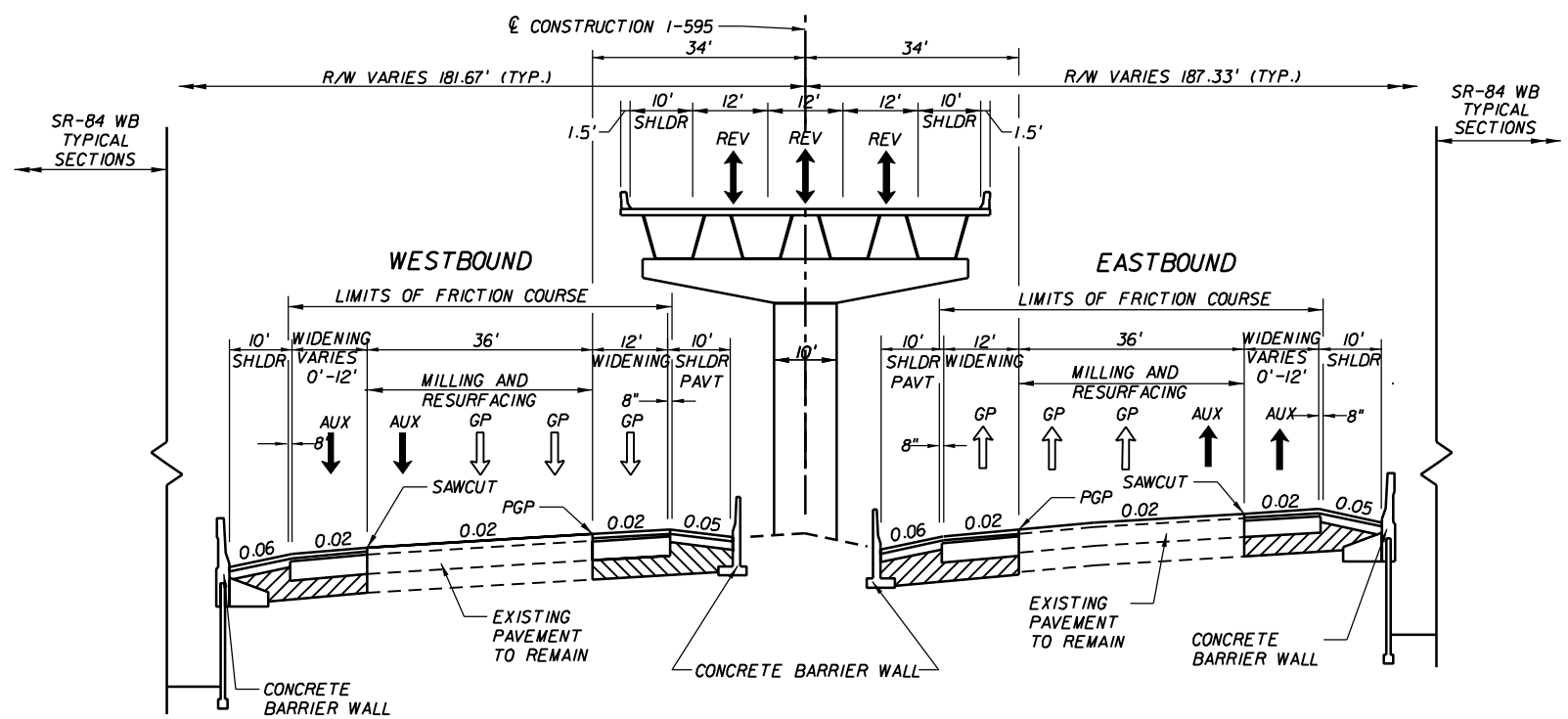

I-595 (SR-862) ALTERNATIVE 2B
SUPERELEVATED SECTION
AT UNIVERSITY DR.

REVISIONS					
DATE	BY	DESCRIPTION	DATE	BY	DESCRIPTION

RS&H
Reynolds, Smith and Hills, Inc.
300 S. Pine Island Road, Suite 300
Plantation, Florida 33324-2619
954-474-3005
FL Cert. No. EB0005620
Phil Schwab, P.E. No. 47555

STATE OF FLORIDA
DEPARTMENT OF TRANSPORTATION

ROAD NO.	COUNTY	FINANCIAL PROJECT ID
862	BROWARD	409354-1-22-01

ALTERNATIVE 2B TYPICAL SECTIONS

SHEET NO. 34

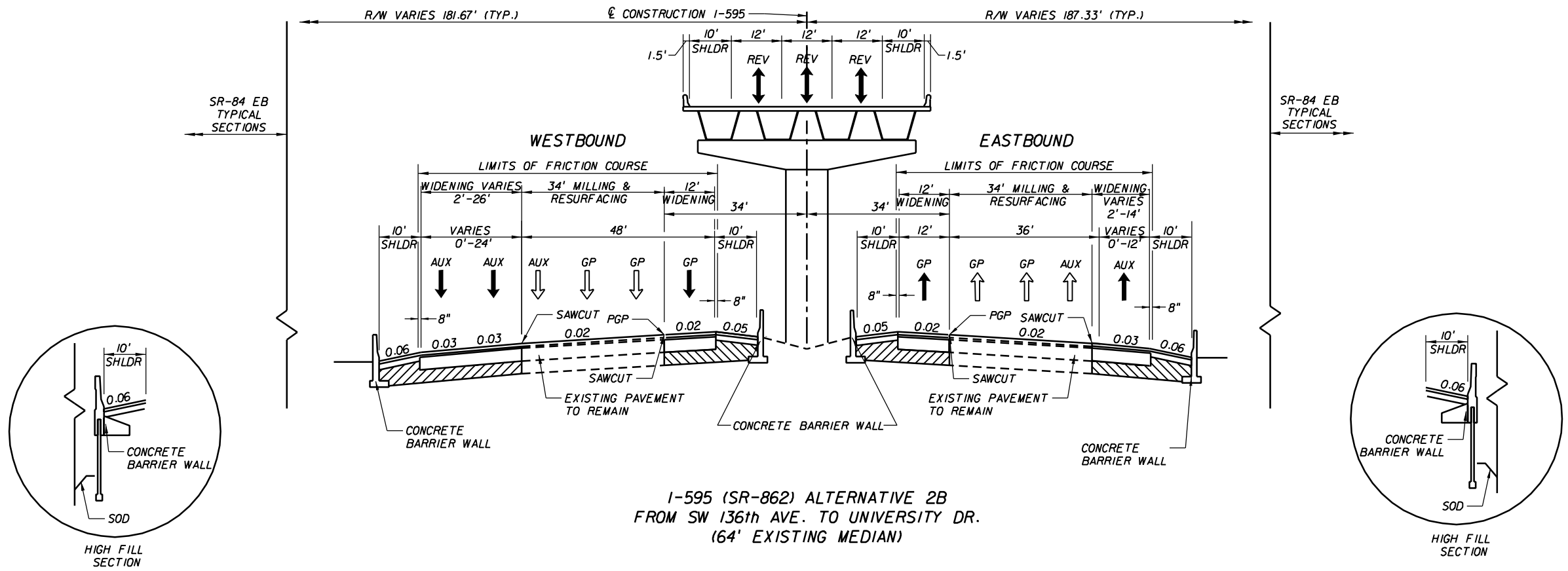

I-595 (SR-862) ALTERNATIVE 2B
FROM SW 136th AVE. TO UNIVERSITY DR.
(64' EXISTING MEDIAN)

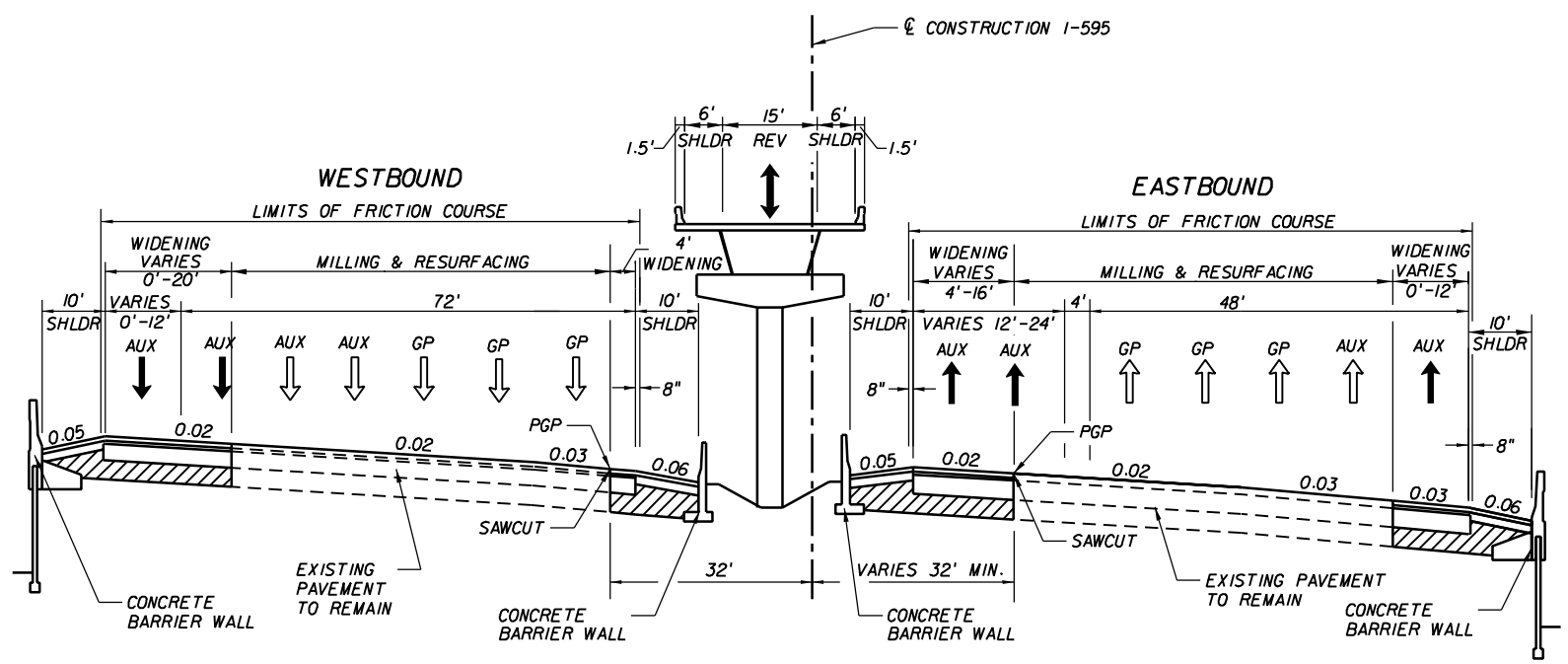

I-595 (SR-862) ALTERNATIVE 2B
SUPERELEVATED SECTION
AT SW 136TH AVE.

REVISIONS					
DATE	BY	DESCRIPTION	DATE	BY	DESCRIPTION

RS&H
Reynolds, Smith and Hills, Inc.
300 S. Pine Island Road, Suite 300
Plantation, Florida 33324-2619
954-474-3005
FL Cert. No. EB0005620
Phil Schwab, P.E. No. 47555

STATE OF FLORIDA
DEPARTMENT OF TRANSPORTATION

ROAD NO.	COUNTY	FINANCIAL PROJECT ID
862	BROWARD	409354-1-22-01

ALTERNATIVE 2B TYPICAL SECTIONS

SHEET NO. 35

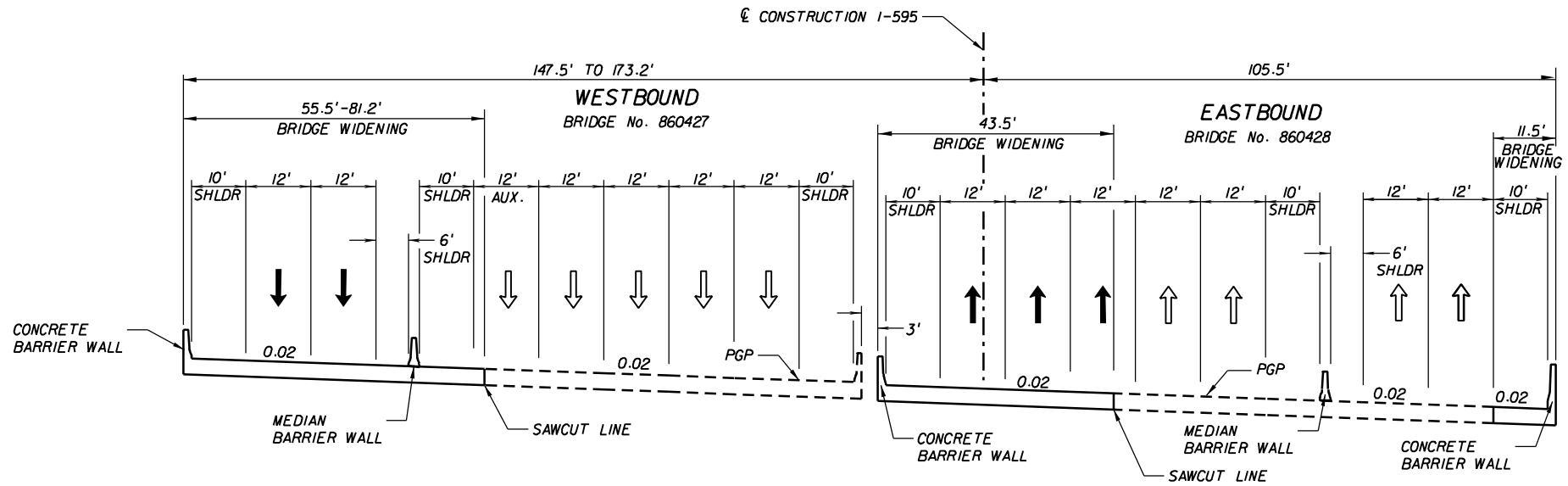

I-595 (SR-862) ALTERNATIVE 2B
BRIDGES OVER POND APPLE SLOUGH
(SUPERELEVATED SECTION)

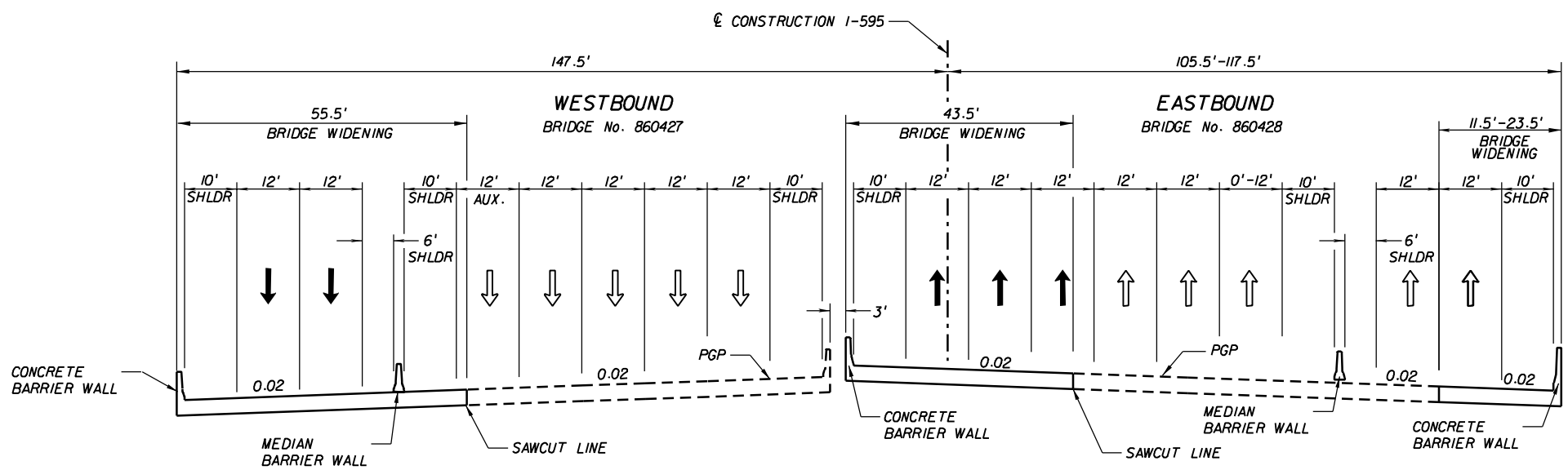

I-595 (SR-862) ALTERNATIVE 2B
BRIDGES OVER POND APPLE SLOUGH

REVISIONS					
DATE	BY	DESCRIPTION	DATE	BY	DESCRIPTION

RS&H
Reynolds, Smith and Hills, Inc.
300 S. Pine Island Road, Suite 300
Plantation, Florida 33324-2619
954-474-3005
FL Cert. No. EB0005620
Phil Schwab, P.E. No. 47555

STATE OF FLORIDA
DEPARTMENT OF TRANSPORTATION

ROAD NO.	COUNTY	FINANCIAL PROJECT ID
862	BROWARD	409354-1-22-01

ALTERNATIVE 2B
TYPICAL SECTIONS

SHEET NO.
36

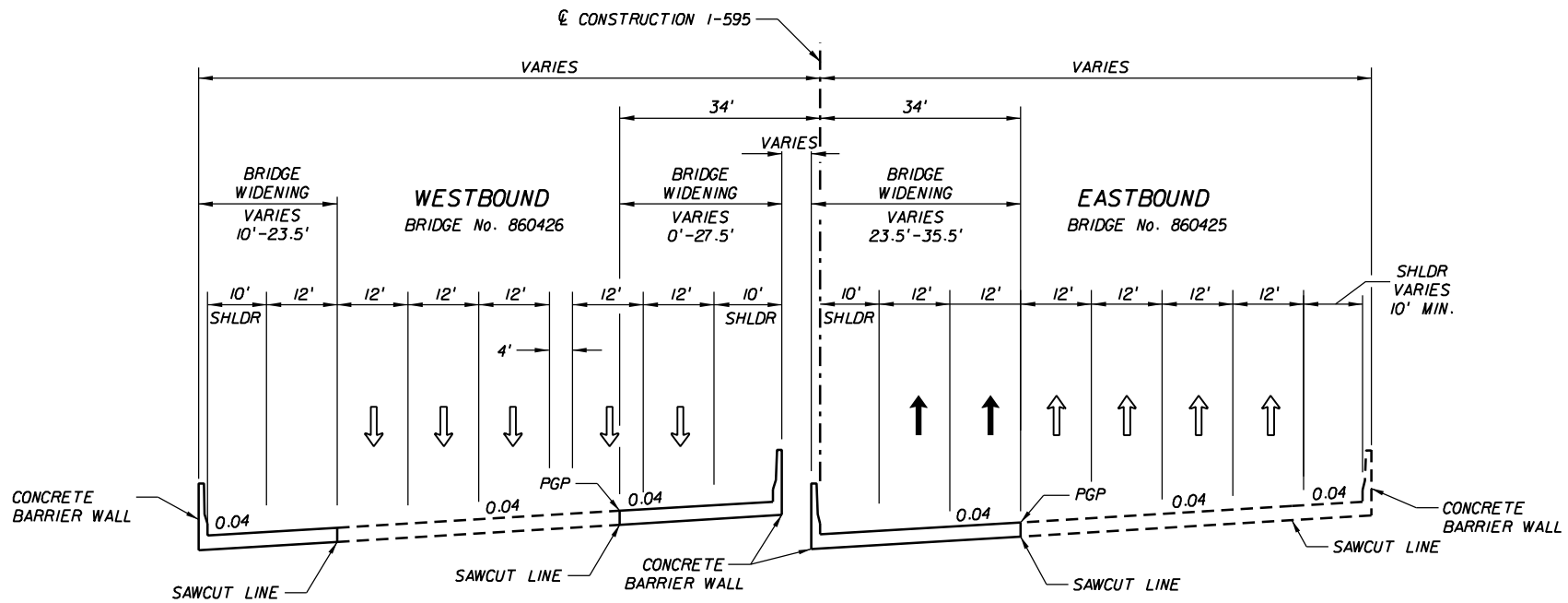

I-595 (SR-862) ALTERNATIVE 2B
BRIDGES OVER RAMPS TH & K

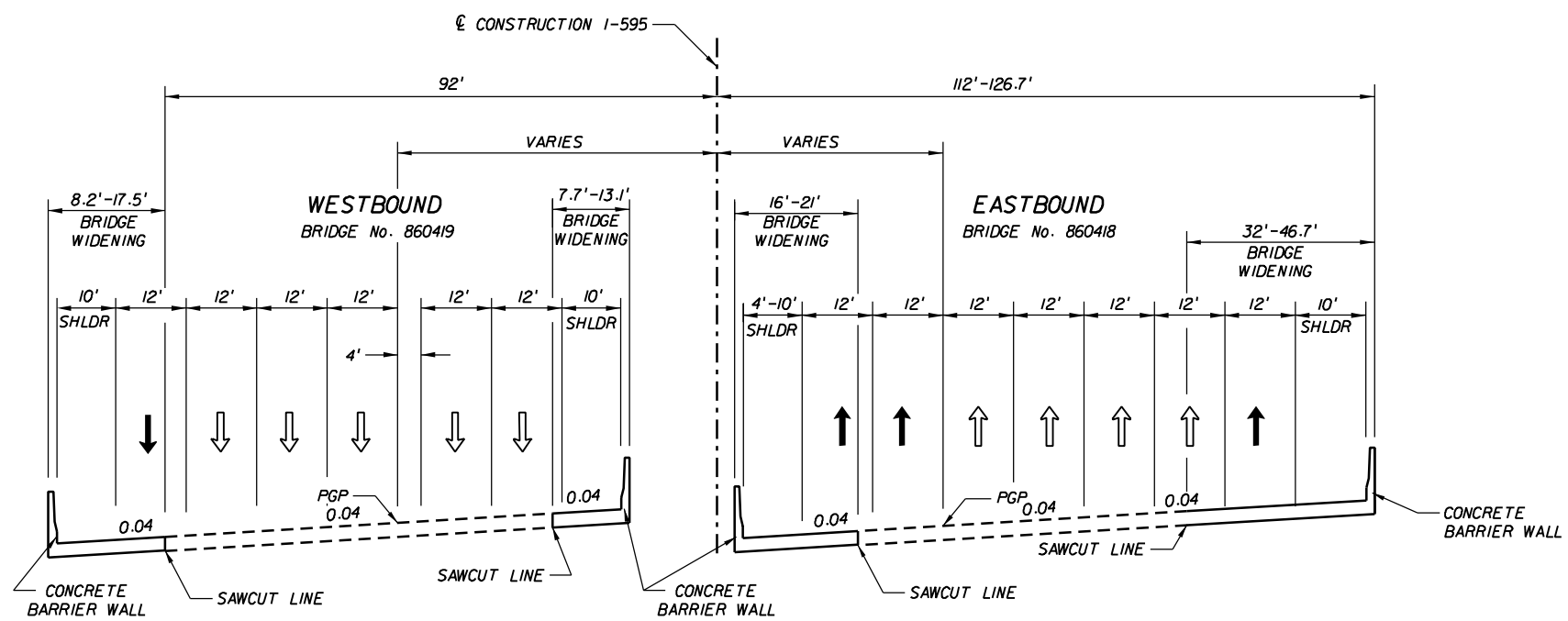

I-595 (SR-862) ALTERNATIVE 2B
BRIDGES OVER SR-7 (US-441)

REVISIONS					
DATE	BY	DESCRIPTION	DATE	BY	DESCRIPTION

RS&H
Reynolds, Smith and Hills, Inc.
300 S. Pine Island Road, Suite 300
Plantation, Florida 33324-2619
954-474-3005
FL Cert. No. EB0005620
Phil Schwab, P.E. No. 47555

STATE OF FLORIDA
DEPARTMENT OF TRANSPORTATION

ROAD NO.	COUNTY	FINANCIAL PROJECT ID
862	BROWARD	409354-1-22-01

ALTERNATIVE 2B TYPICAL SECTIONS

SHEET NO. 37

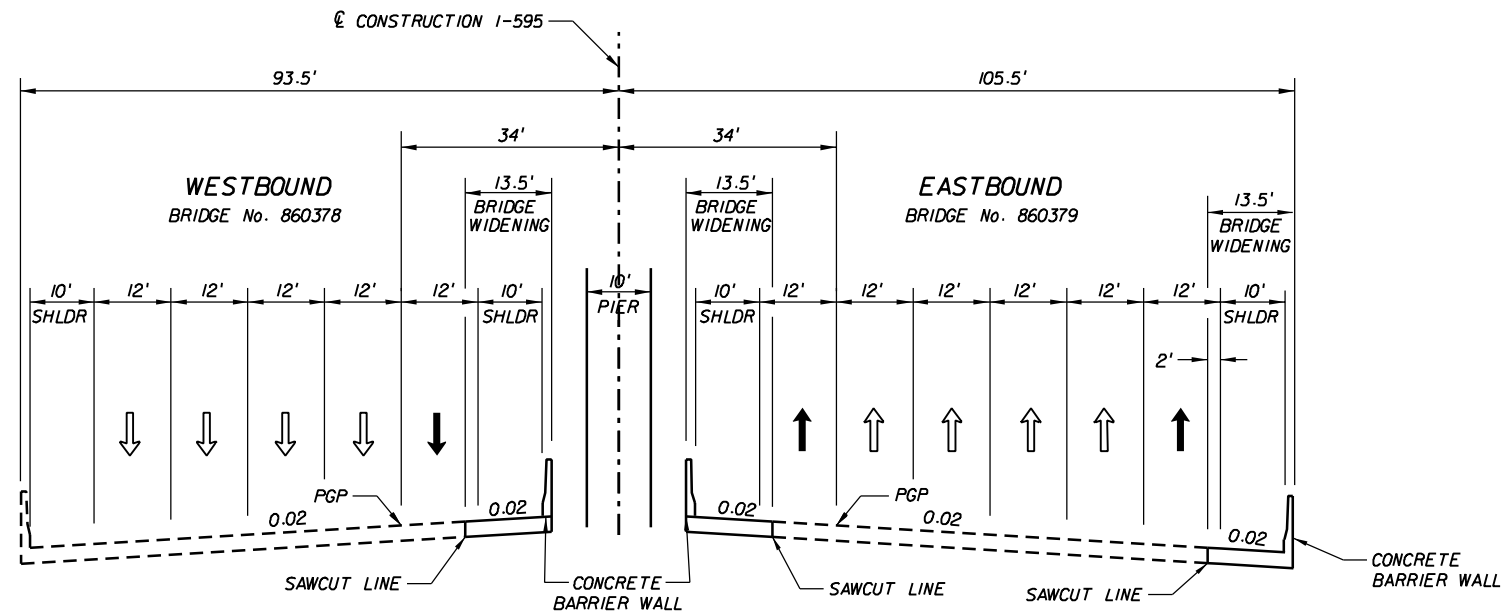

I-595 (SR-862) ALTERNATIVE 2B
BRIDGES OVER DAVIE ROAD

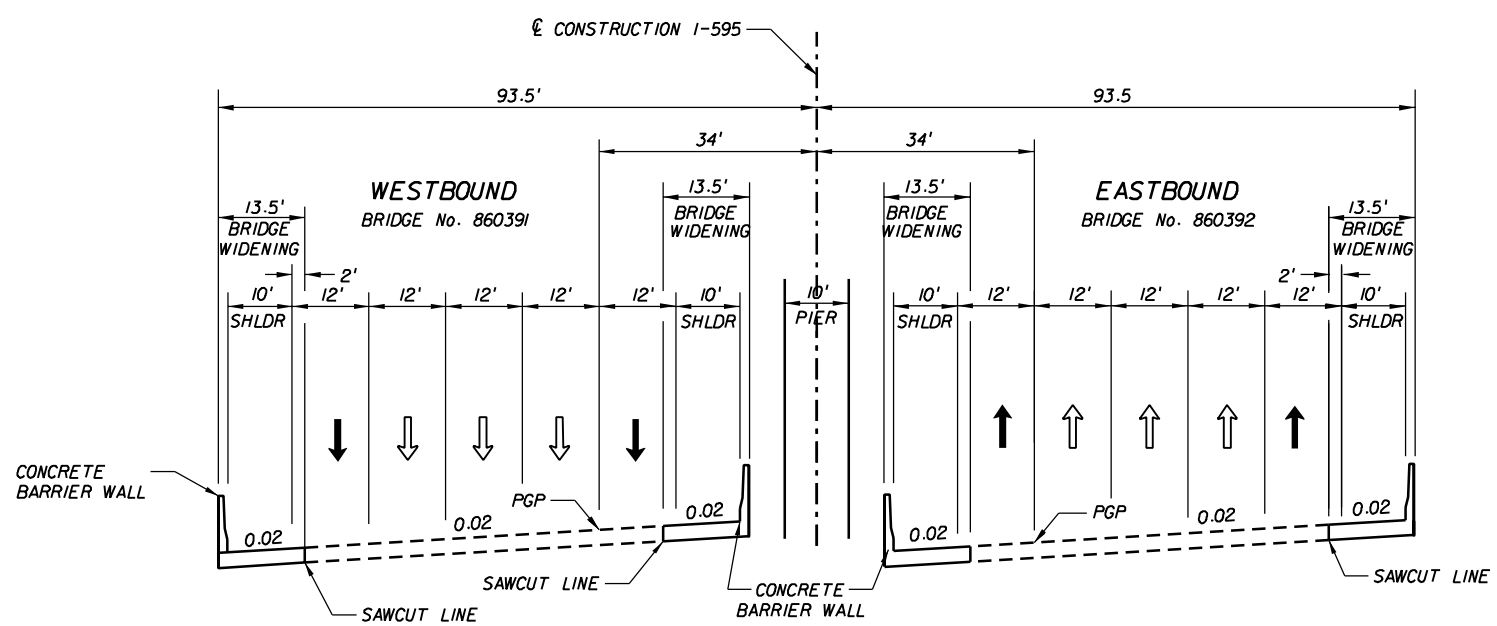

I-595 (SR-862) ALTERNATIVE 2B
BRIDGES OVER UNIVERSITY DRIVE

REVISIONS					
DATE	BY	DESCRIPTION	DATE	BY	DESCRIPTION

RS&H
Reynolds, Smith and Hills, Inc.
300 S. Pine Island Road, Suite 300
Plantation, Florida 33324-2619
954-474-3005
FL Cert. No. EB0005620
Phil Schwab, P.E. No. 47555

STATE OF FLORIDA
DEPARTMENT OF TRANSPORTATION

ROAD NO.	COUNTY	FINANCIAL PROJECT ID
862	BROWARD	409354-1-22-01

ALTERNATIVE 2B
TYPICAL SECTIONS

SHEET NO.
38

2/14/2006 3:28:00 PM x:\projects\II14553000\roadway\PE Report\typsrd02b.dgn

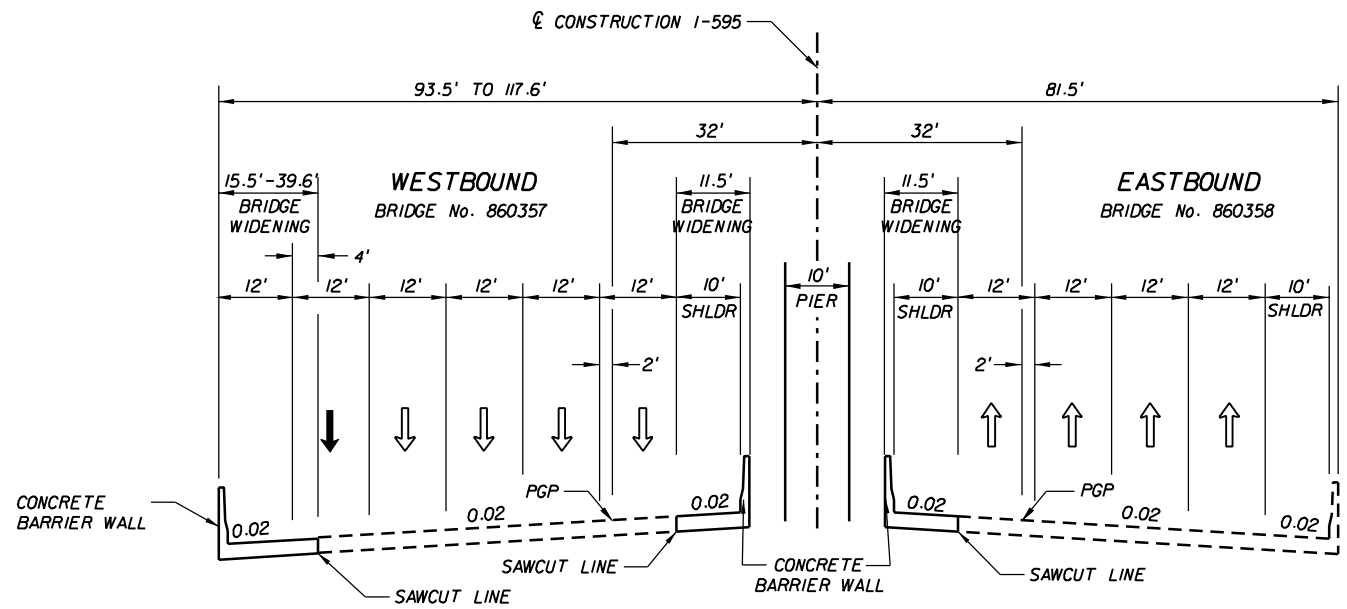

I-595 (SR-862) ALTERNATIVE 2B
BRIDGES OVER PINE ISLAND ROAD

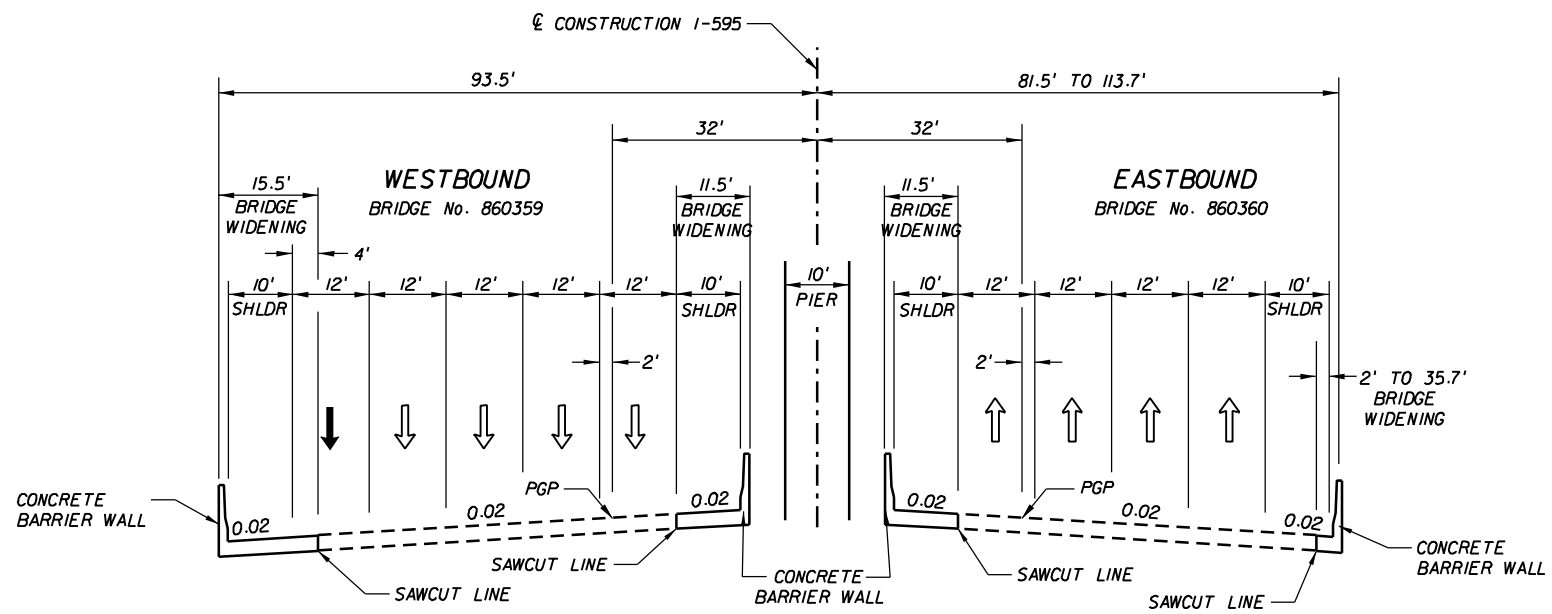

I-595 (SR-862) ALTERNATIVE 2B
BRIDGES OVER NOB HILL ROAD

REVISIONS					
DATE	BY	DESCRIPTION	DATE	BY	DESCRIPTION

RS&H
Reynolds, Smith and Hills, Inc.
300 S. Pine Island Road, Suite 300
Plantation, Florida 33324-2619
954-474-3005
FL Cert. No. EB0005620
Phil Schwab, P.E. No. 47555

STATE OF FLORIDA
DEPARTMENT OF TRANSPORTATION

ROAD NO.	COUNTY	FINANCIAL PROJECT ID
862	BROWARD	409354-1-22-01

ALTERNATIVE 2B TYPICAL SECTIONS

SHEET NO.
39

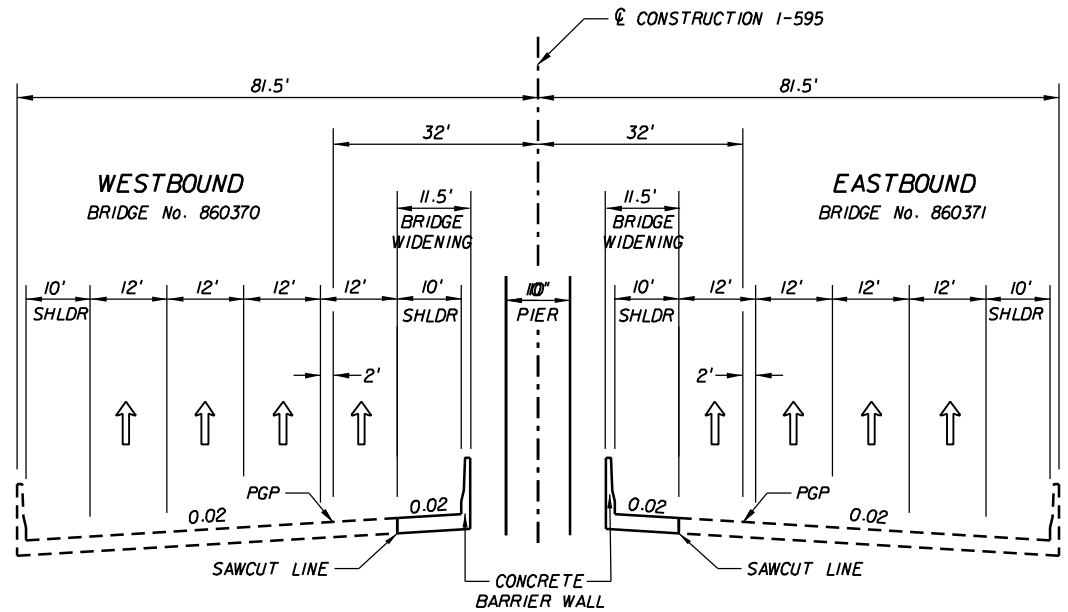

I-595 (SR-862) ALTERNATIVE 2B
BRIDGES OVER HIATUS ROAD

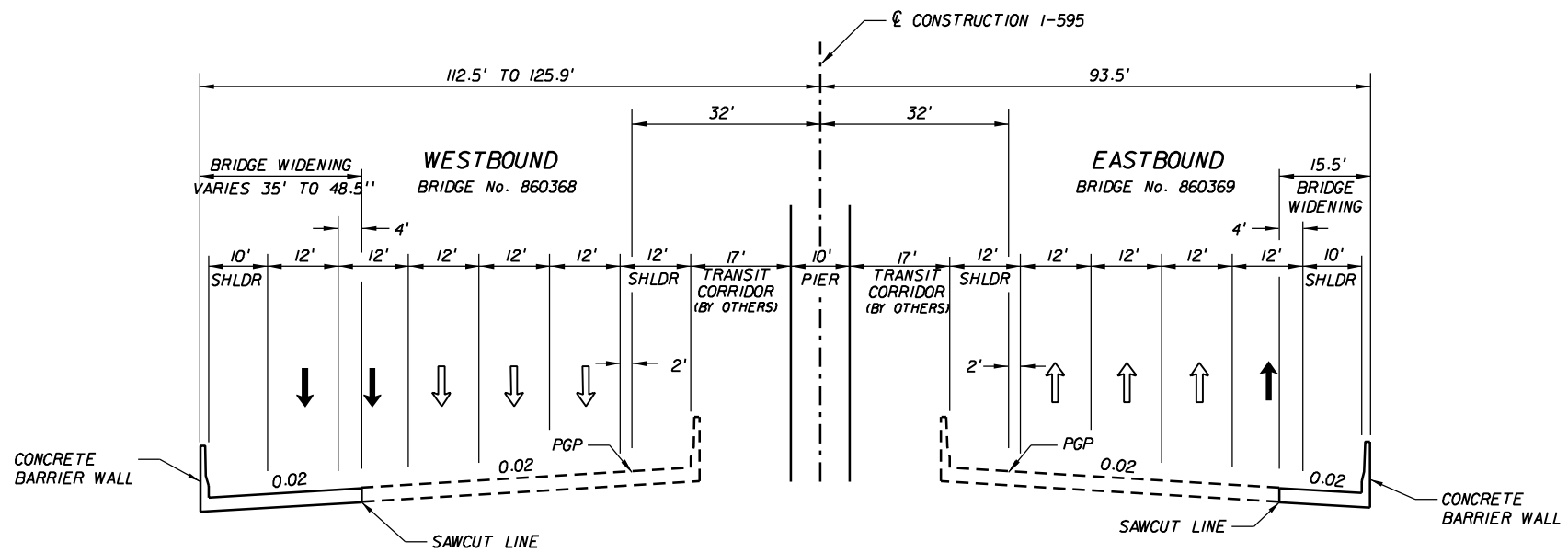

I-595 (SR-862) ALTERNATIVE 2B
BRIDGES OVER FLAMINGO ROAD

REVISIONS					
DATE	BY	DESCRIPTION	DATE	BY	DESCRIPTION

RS&H
Reynolds, Smith and Hills, Inc.
300 S. Pine Island Road, Suite 300
Plantation, Florida 33324-2619
954-474-3005
FL Cert. No. EB0005620
Phil Schwab, P.E. No. 47555

STATE OF FLORIDA
DEPARTMENT OF TRANSPORTATION

ROAD NO.	COUNTY	FINANCIAL PROJECT ID
862	BROWARD	409354-1-22-01

ALTERNATIVE 2B TYPICAL SECTIONS

SHEET NO.
40

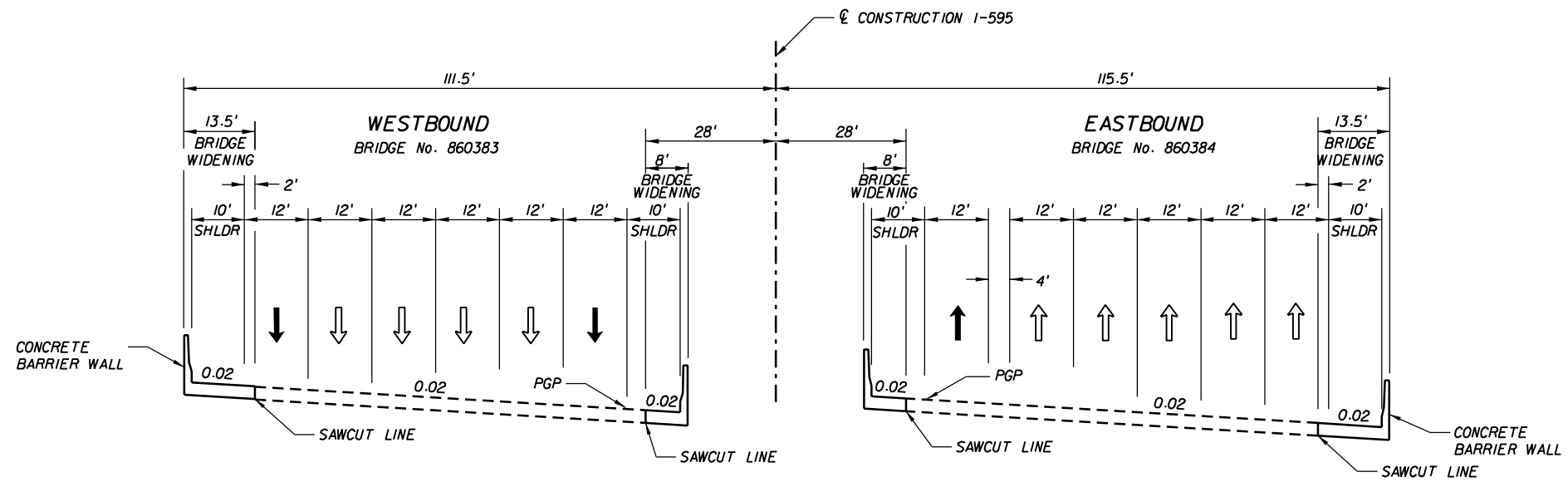

1-595 (SR-862) ALTERNATIVE 2B
BRIDGES OVER SW 136TH STREET

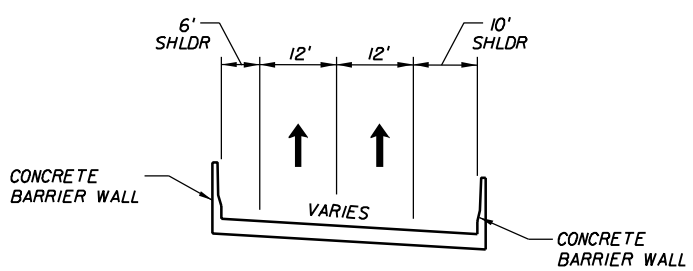

2 LANE BRIDGE STRUCTURE

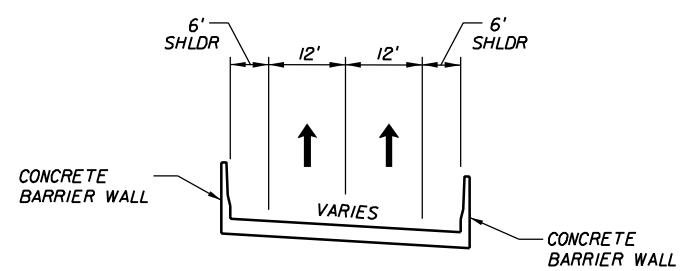

2 LANE BRIDGE STRUCTURE
WITH REDUCED OUTSIDE SHOULDER

FLAMINGO ROAD WB OFF RAMP
PINE ISLAND ROAD EB OFF RAMP
NOB HILL ROAD WB OFF RAMP
UNIVERSITY DRIVE WB OFF RAMP

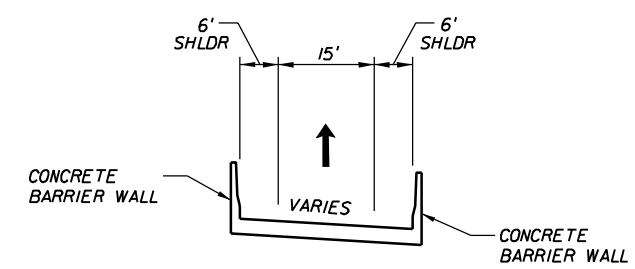

1 LANE BRIDGE STRUCTURE

HIATUS ROAD EB BYPASS RAMPS
PINE ISLAND ROAD EB BYPASS RAMP
UNIVERSITY DRIVE FLYOVER RAMPS
DAVIE ROAD EB RAMP
NOB HILL ROAD WB ON RAMP

REVISIONS					
DATE	BY	DESCRIPTION	DATE	BY	DESCRIPTION

RS&H
Reynolds, Smith and Hills, Inc.
300 S. Pine Island Road, Suite 300
Plantation, Florida 33324-2619
954-474-3005
FL Cert. No. EB0005620
Phil Schwab, P.E. No. 47555

STATE OF FLORIDA
DEPARTMENT OF TRANSPORTATION

ROAD NO.	COUNTY	FINANCIAL PROJECT ID
862	BROWARD	409354-1-22-01

ALTERNATIVE 2B
TYPICAL SECTIONS

SHEET NO.
41

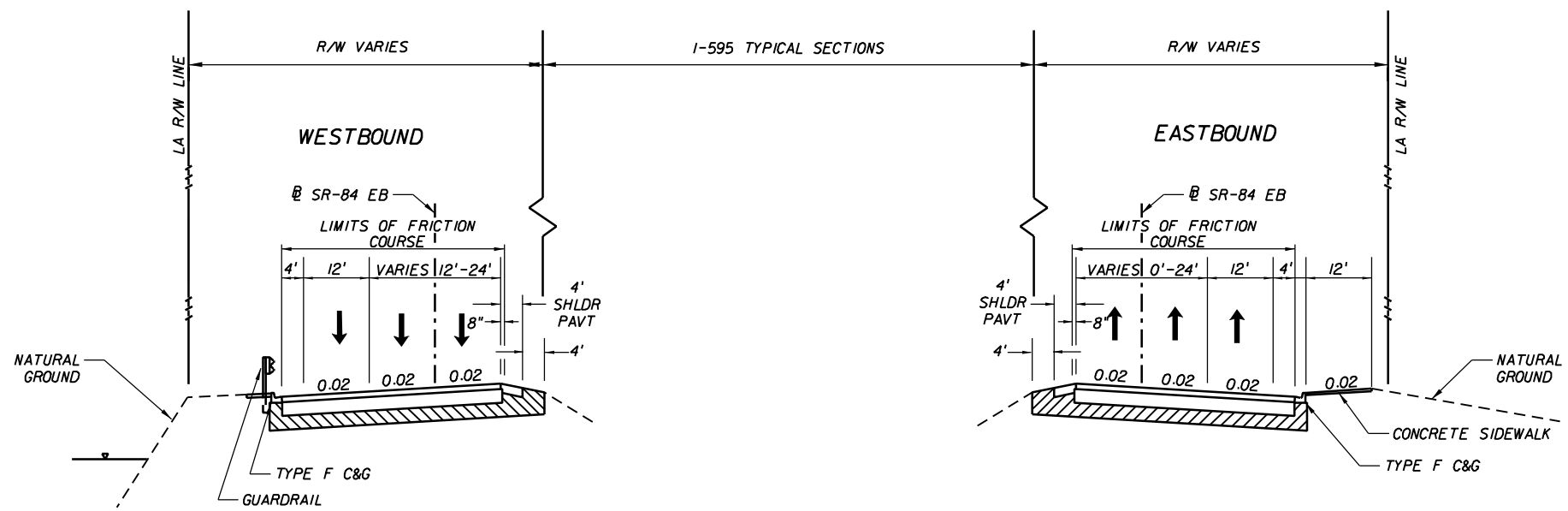

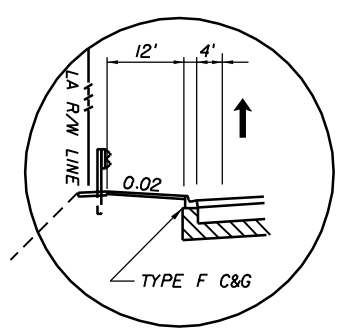

WITH ADJACENT MIXED USE
BIKE PATH
(DAVIE RD. TO SR-7)

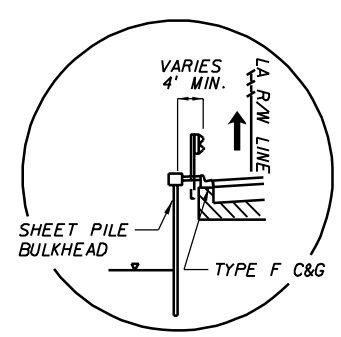

BULKHEAD SECTION
(INSIDE SFWMD R/W)

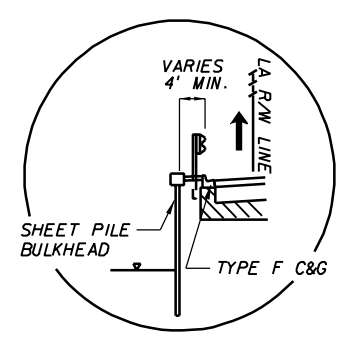

BULKHEAD SECTION
WITH 8' NOISE WALL
(INSIDE SFWMD R/W)

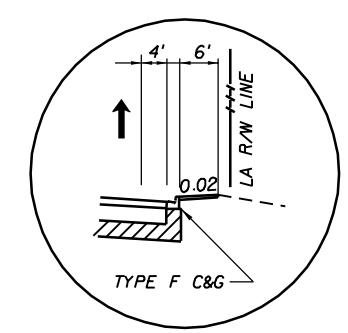

WITH ADJACENT 6' SIDEWALK
(UNIVERSITY DR. TO DAVIE RD.)

REVISIONS					
DATE	BY	DESCRIPTION	DATE	BY	DESCRIPTION

RS&H
Reynolds, Smith and Hills, Inc.
300 S. Pine Island Road, Suite 300
Plantation, Florida 33324-2619
954-474-3005
FL Cert. No. EB0005620
Phil Schwab, P.E. No. 47555

STATE OF FLORIDA
DEPARTMENT OF TRANSPORTATION

ROAD NO.	COUNTY	FINANCIAL PROJECT ID
862	BROWARD	409354-1-22-01

ALTERNATIVE 2B
TYPICAL SECTIONS

SHEET NO. 42

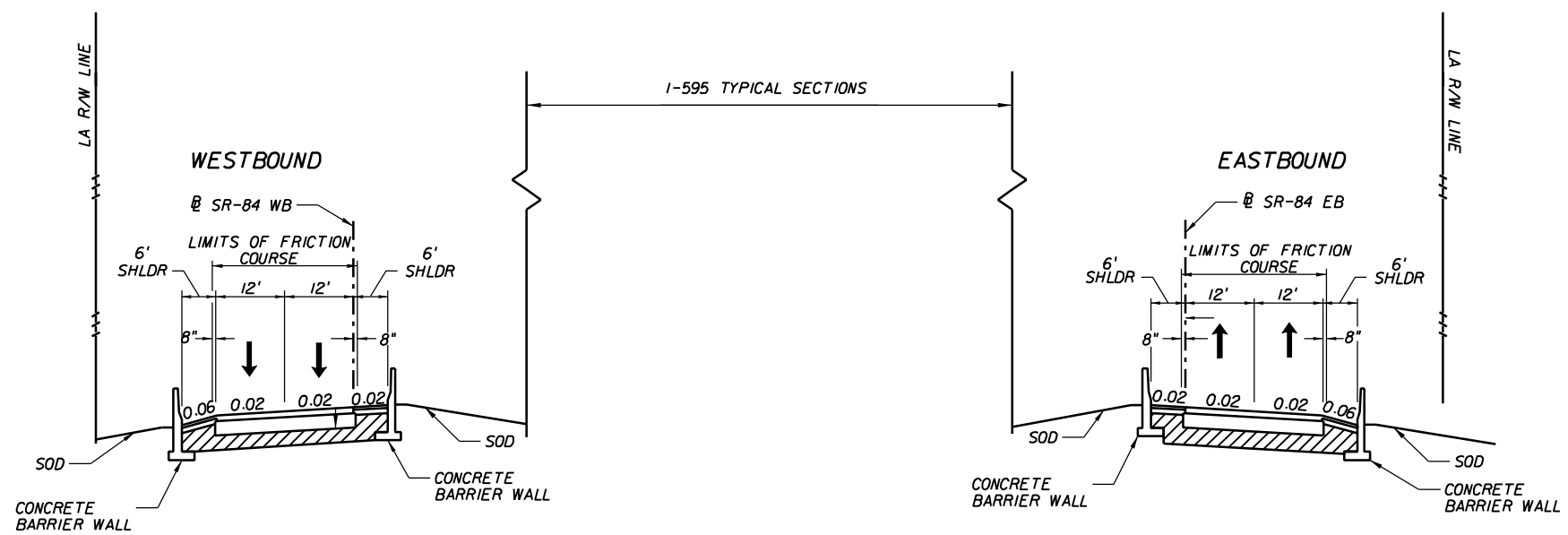

SR-84
WITH REDUCED OUTSIDE SHOULDER AT RAMP BRAIDS

REVISIONS					
DATE	BY	DESCRIPTION	DATE	BY	DESCRIPTION

RS&H
Reynolds, Smith and Hills, Inc.
300 S. Pine Island Road, Suite 300
Plantation, Florida 33324-2619
954-474-3005
FL Cert. No. EB0005620
Phil Schwab, P.E. No. 47555

STATE OF FLORIDA
DEPARTMENT OF TRANSPORTATION

ROAD NO.	COUNTY	FINANCIAL PROJECT ID
862	BROWARD	409354-1-22-01

ALTERNATIVE 2B
TYPICAL SECTIONS

SHEET NO. 43

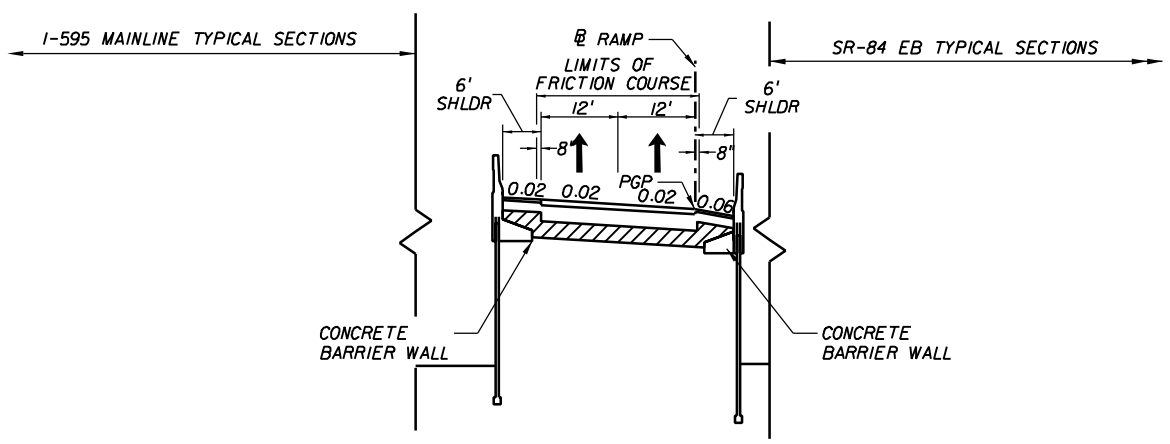

2 LANE RAMP
ON WALL WITH REDUCED OUTSIDE SHOULDER AT RAMP BRAIDS

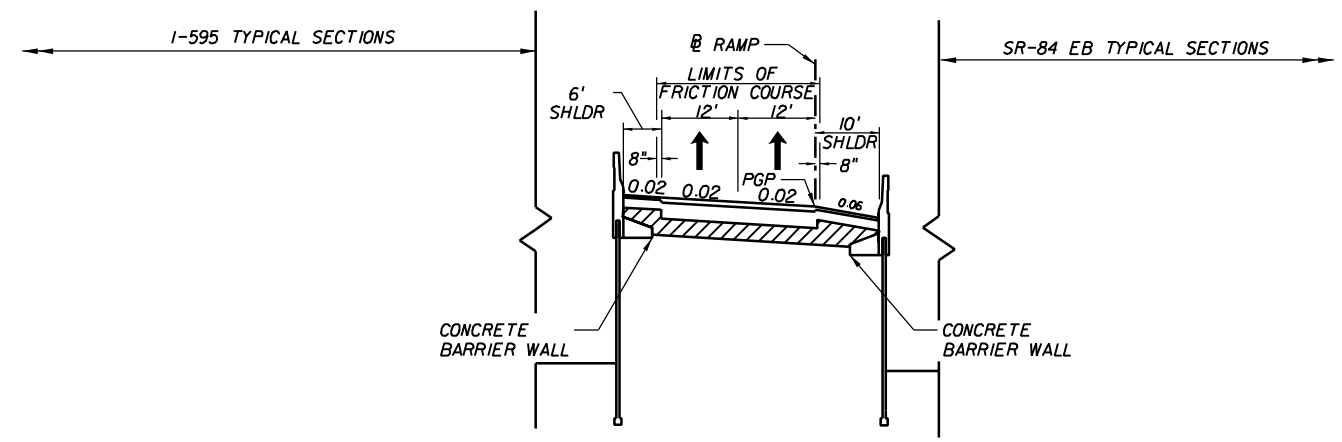

2 LANE RAMP ON WALL

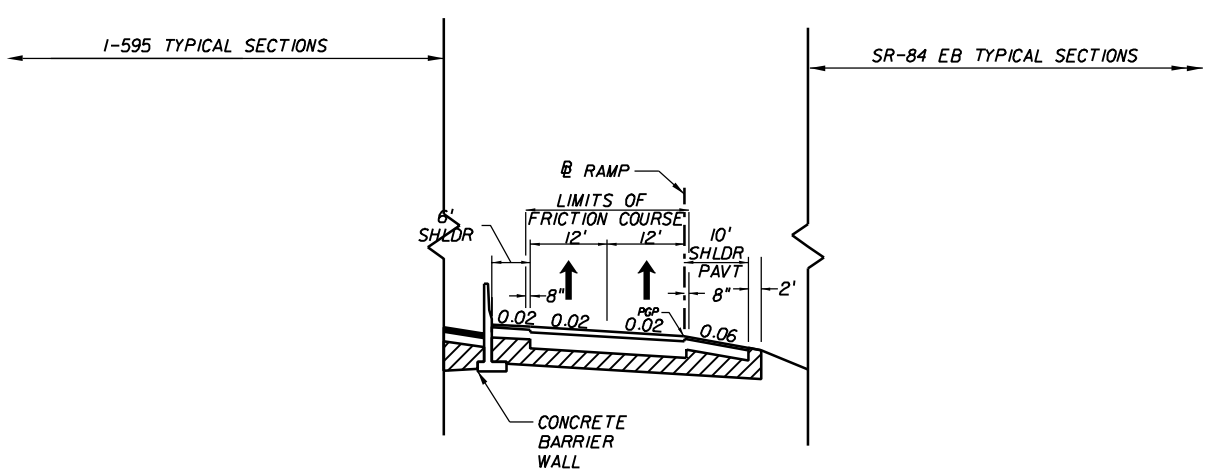

2 LANE RAMP
WITH FLUSH OUTSIDE SHOULDER

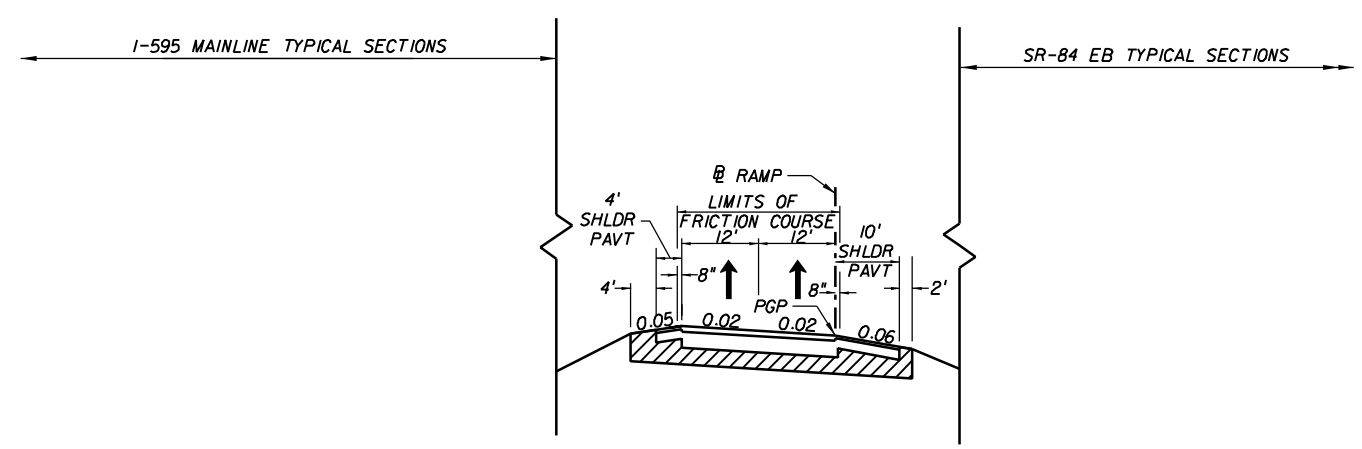

2 LANE RAMP
WITH FLUSH SHOULDERS

REVISIONS					
DATE	BY	DESCRIPTION	DATE	BY	DESCRIPTION

RS&H
Reynolds, Smith and Hills, Inc.
300 S. Pine Island Road, Suite 300
Plantation, Florida 33324-2619
954-474-3005
FL Cert. No. EB0005620
Phil Schwab, P.E. No. 47555

STATE OF FLORIDA
DEPARTMENT OF TRANSPORTATION

ROAD NO.	COUNTY	FINANCIAL PROJECT ID
862	BROWARD	409354-1-22-01

ALTERNATIVE 2B
TYPICAL SECTIONS

SHEET NO.
44

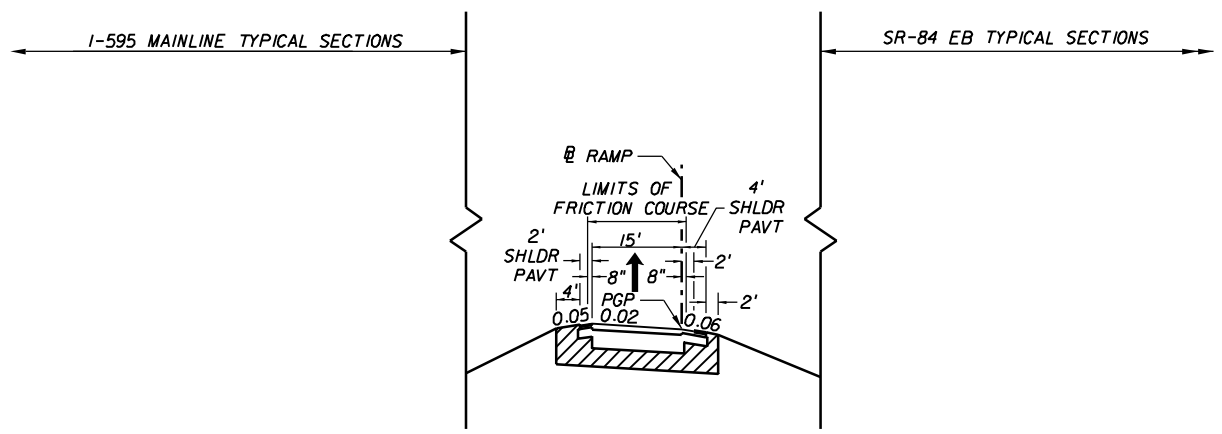

I LANE RAMP
WITH FLUSH SHOULDERS

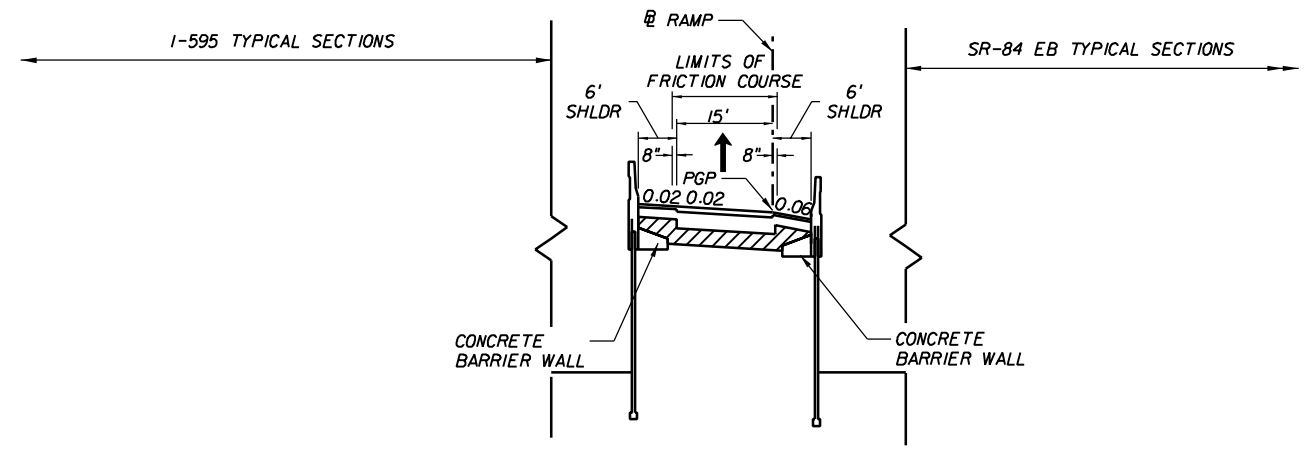

I LANE RAMP ON WALL

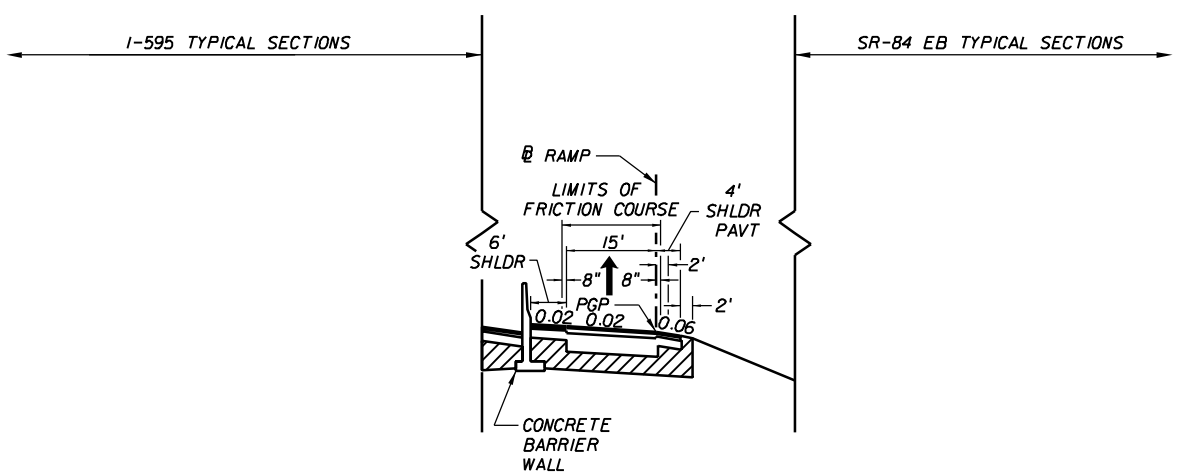

I LANE RAMP
WITH FLUSH OUTSIDE SHOULDER

REVISIONS					
DATE	BY	DESCRIPTION	DATE	BY	DESCRIPTION

RS&H
Reynolds, Smith and Hills, Inc.
300 S. Pine Island Road, Suite 300
Plantation, Florida 33324-2619
954-474-3005
FL Cert. No. EB0005620
Phil Schwab, P.E. No. 47555

STATE OF FLORIDA
DEPARTMENT OF TRANSPORTATION

ROAD NO.	COUNTY	FINANCIAL PROJECT ID
862	BROWARD	409354-1-22-01

ALTERNATIVE 2B
TYPICAL SECTIONS

SHEET NO.
45

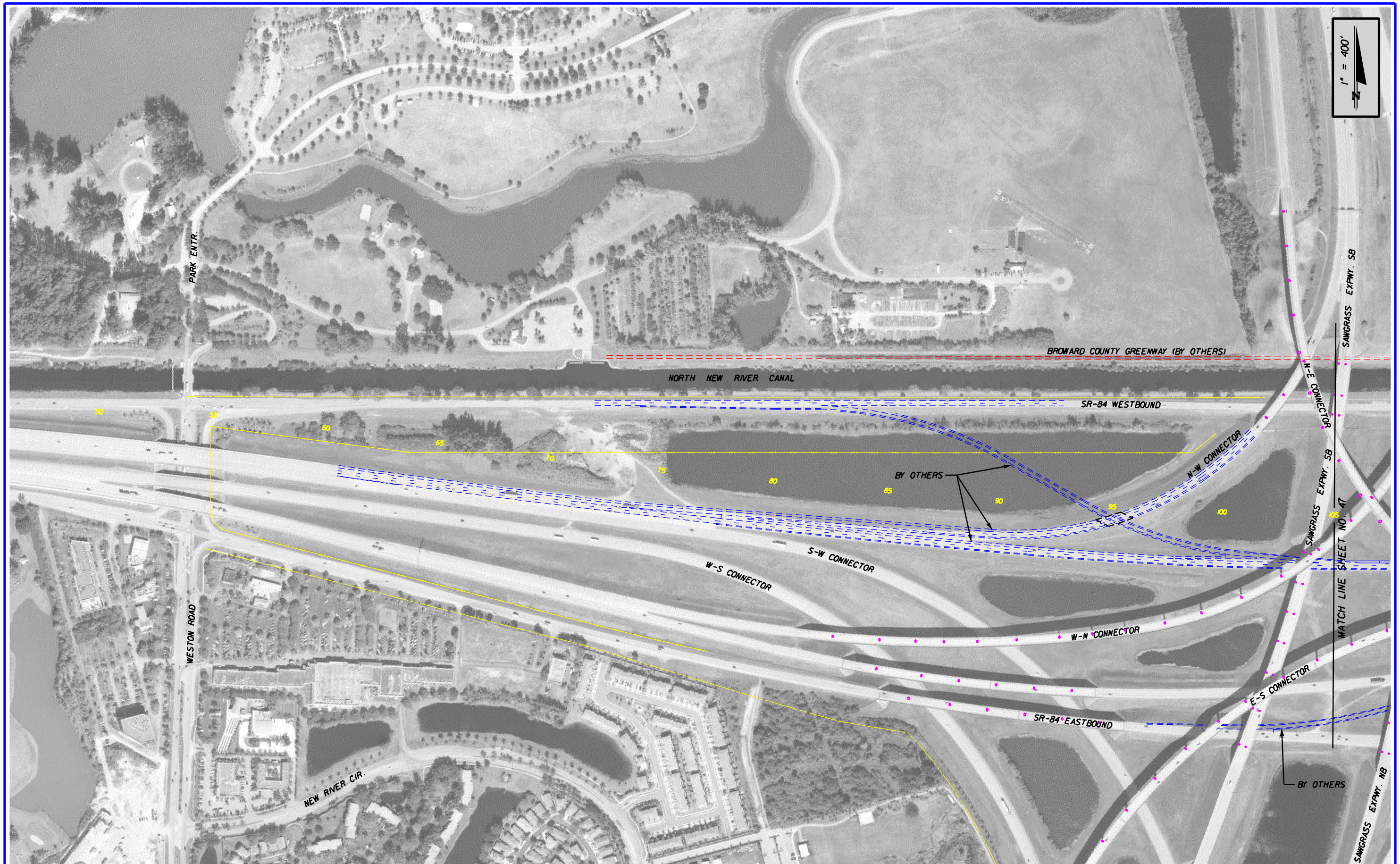

REVISIONS					
DATE	BY	DESCRIPTION	DATE	BY	DESCRIPTION

RS&H
Reynolds, Smith and Hills, Inc.
300 S. Pine Island Road, Suite 300
Plantation, Florida 33324-2619
954-474-3005
FL Cert. No. EB0005620
Phil Schwab, P.E. No. 47555

STATE OF FLORIDA
DEPARTMENT OF TRANSPORTATION

ROAD NO.	COUNTY	FINANCIAL PROJECT ID
862	BROWARD	409354-1-22-01

I-595 PD&E STUDY
ALTERNATIVE 1A PLAN

SHEET NO.
46

$USER$ 2/15/2006 7:40:53 AM x:\projects\ill455300\roadway\PE Report\planA01.dgn

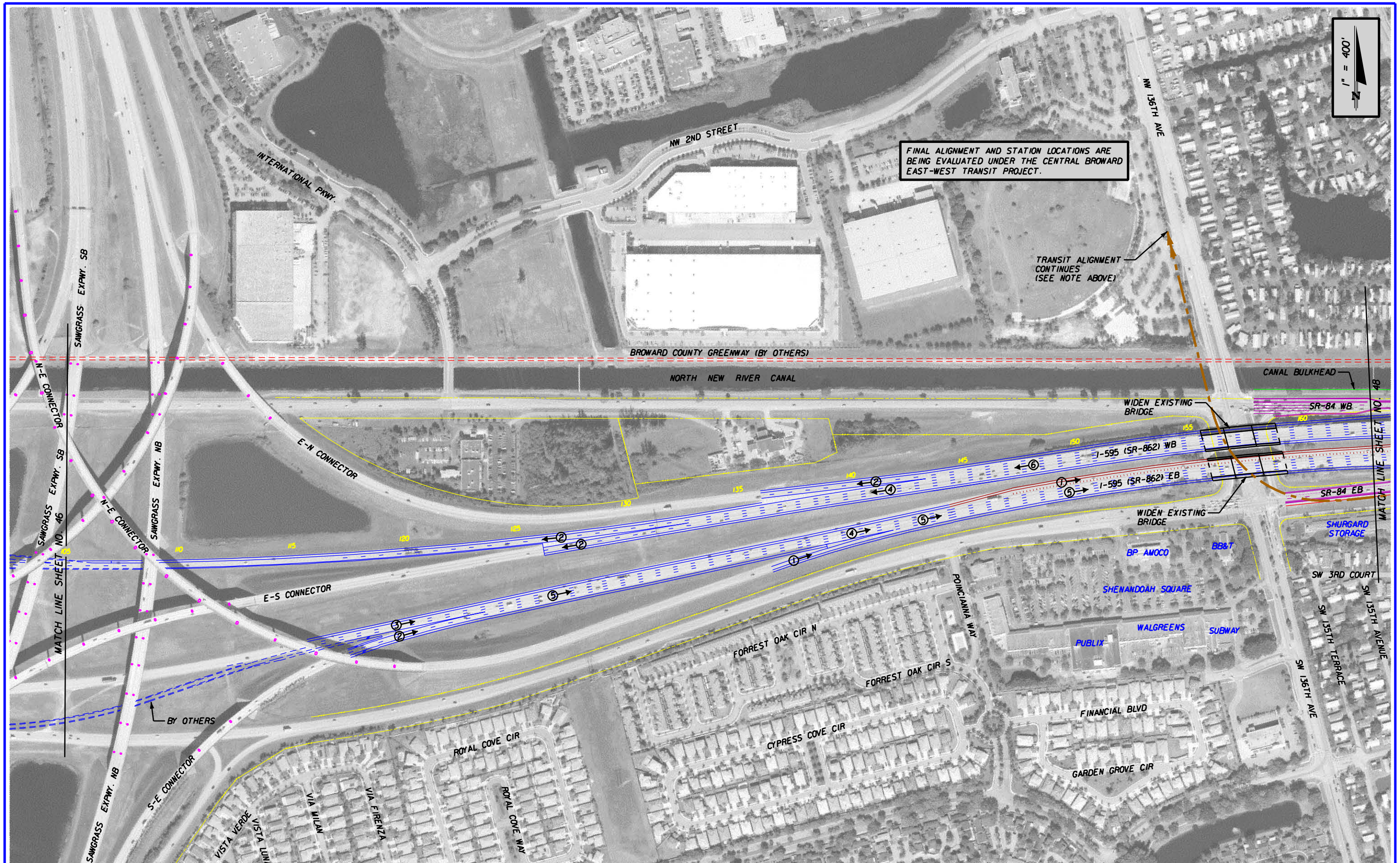

REVISIONS					
DATE	BY	DESCRIPTION	DATE	BY	DESCRIPTION

RS&H
Reynolds, Smith and Hills, Inc.
300 S. Pine Island Road, Suite 300
Plantation, Florida 33324-2619
954-474-3005
FL Cert. No. EB0005620
Phil Schwab, P.E. No. 47555

STATE OF FLORIDA
DEPARTMENT OF TRANSPORTATION

ROAD NO.	COUNTY	FINANCIAL PROJECT ID
862	BROWARD	409354-1-22-01

I-595 PD&E STUDY
ALTERNATIVE 1A PLAN

SHEET NO.
47

REVISIONS					
DATE	BY	DESCRIPTION	DATE	BY	DESCRIPTION

RS&H
Reynolds, Smith and Hills, Inc.
300 S. Pine Island Road, Suite 300
Plantation, Florida 33324-2619
954-474-3005
FL Cert. No. EB0005620
Phil Schwab, P.E. No. 47555

STATE OF FLORIDA
DEPARTMENT OF TRANSPORTATION

ROAD NO.	COUNTY	FINANCIAL PROJECT ID
862	BROWARD	409354-1-22-01

I-595 PD&E STUDY
ALTERNATIVE 1A PLAN

SHEET NO.
48

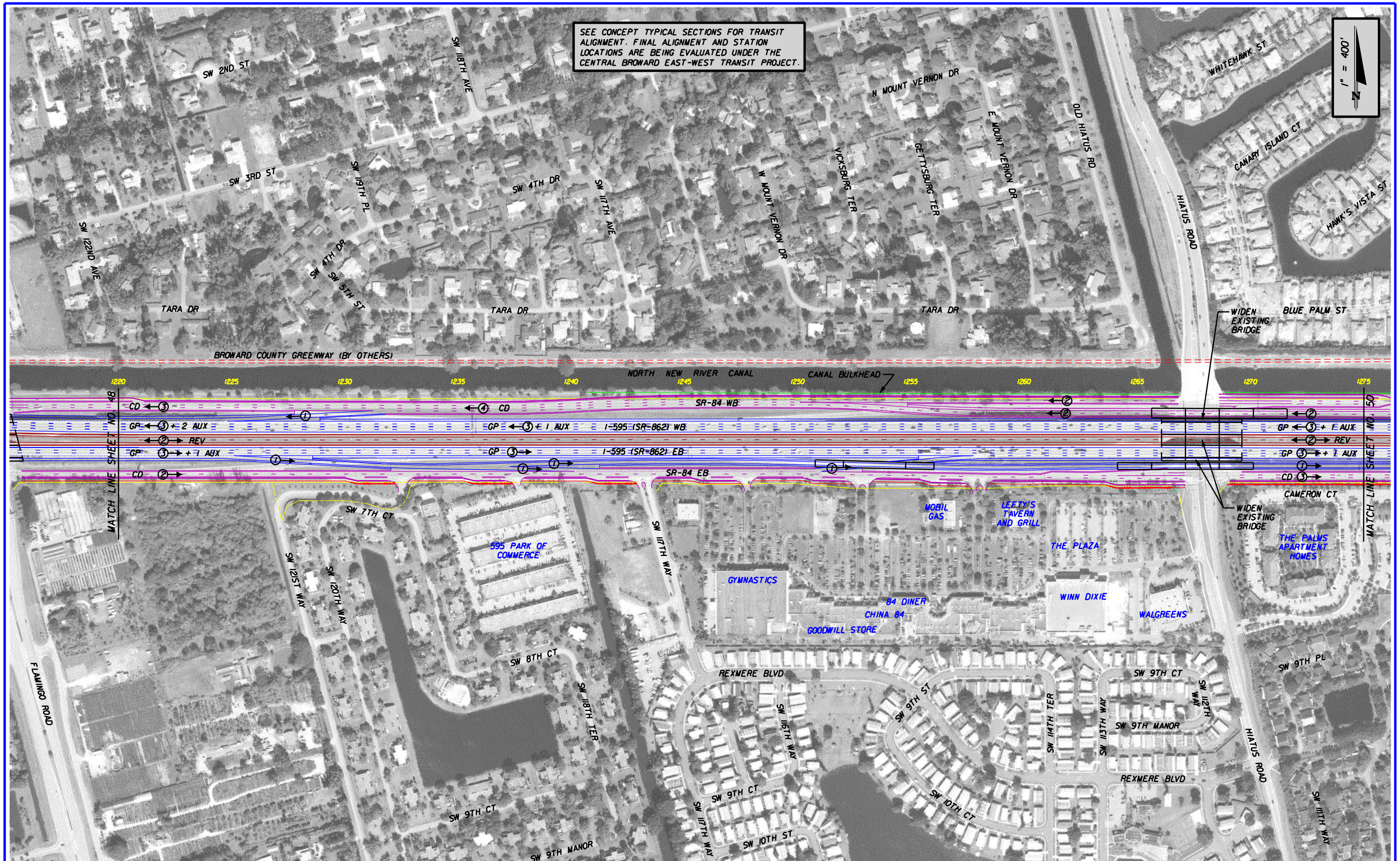

REVISIONS					
DATE	BY	DESCRIPTION	DATE	BY	DESCRIPTION

RS&H
Reynolds, Smith and Hills, Inc.
300 S. Pine Island Road, Suite 300
Plantation, Florida 33324-2619
954-474-3005
FL Cert. No. EB0005620
Phil Schwab, P.E. No. 47555

STATE OF FLORIDA
DEPARTMENT OF TRANSPORTATION

ROAD NO.	COUNTY	FINANCIAL PROJECT ID
862	BROWARD	409354-1-22-01

I-595 PD&E STUDY
ALTERNATIVE 1A PLAN

SHEET NO.
49

REVISIONS					
DATE	BY	DESCRIPTION	DATE	BY	DESCRIPTION

RS&H
Reynolds, Smith and Hills, Inc.
300 S. Pine Island Road, Suite 300
Plantation, Florida 33324-2619
954-474-3005
FL Cert. No. EB0005620
Phil Schwab, P.E. No. 47555

STATE OF FLORIDA
DEPARTMENT OF TRANSPORTATION

ROAD NO.	COUNTY	FINANCIAL PROJECT ID
862	BROWARD	409354-1-22-01

I-595 PD&E STUDY
ALTERNATIVE 1A PLAN

SHEET NO. 50

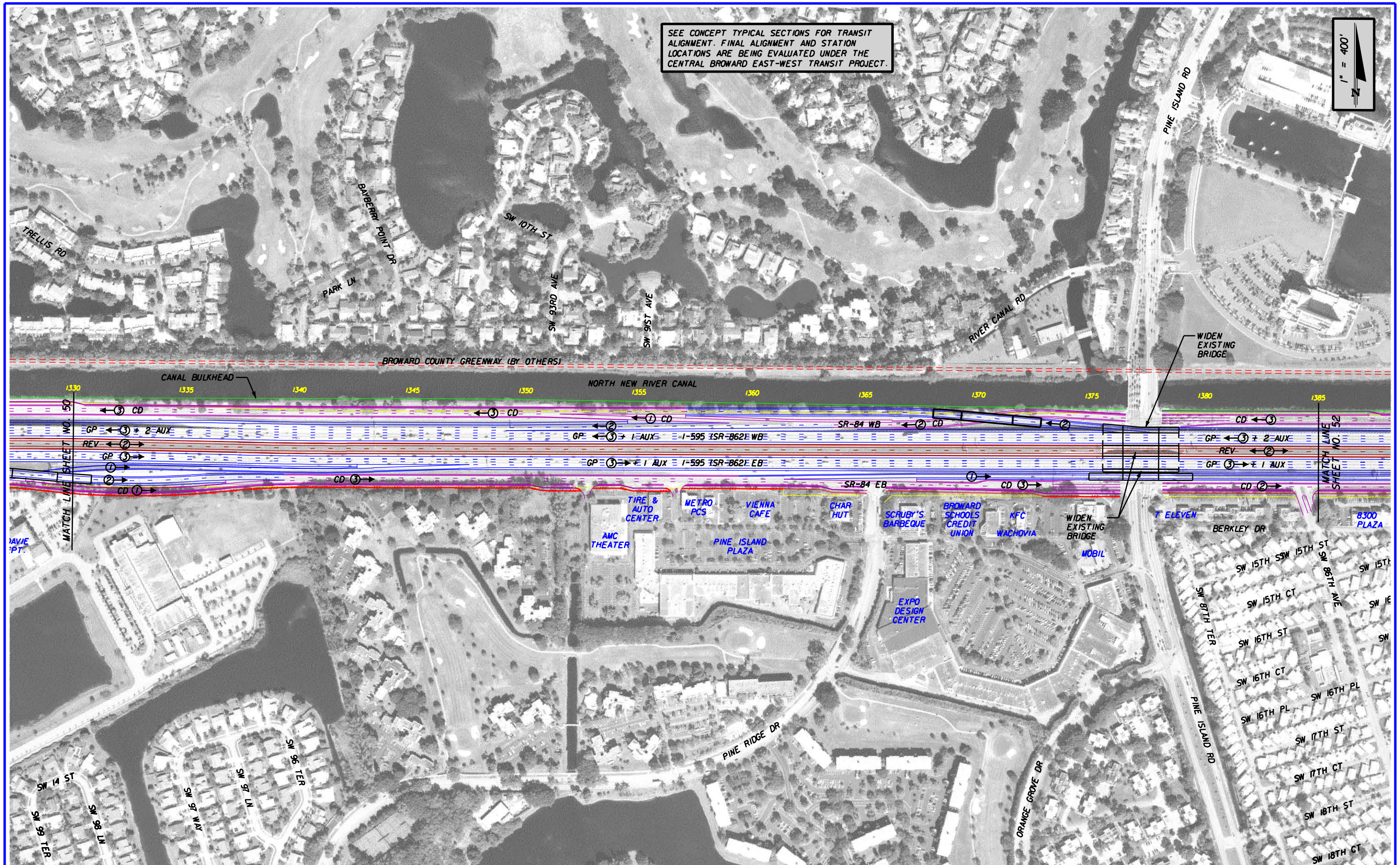

REVISIONS					
DATE	BY	DESCRIPTION	DATE	BY	DESCRIPTION

RS&H
Reynolds, Smith and Hills, Inc.
300 S. Pine Island Road, Suite 300
Plantation, Florida 33324-2619
954-474-3005
FL Cert. No. EB0005620
Phil Schwab, P.E. No. 47555

STATE OF FLORIDA
DEPARTMENT OF TRANSPORTATION

ROAD NO.	COUNTY	FINANCIAL PROJECT ID
862	BROWARD	409354-1-22-01

I-595 PD&E STUDY
ALTERNATIVE 1A PLAN

SHEET NO.
51

$USER$ 2/15/2006 7:43:47 AM x:\projects\ill4553000\roadway\PE_Report\planIA06.dgn

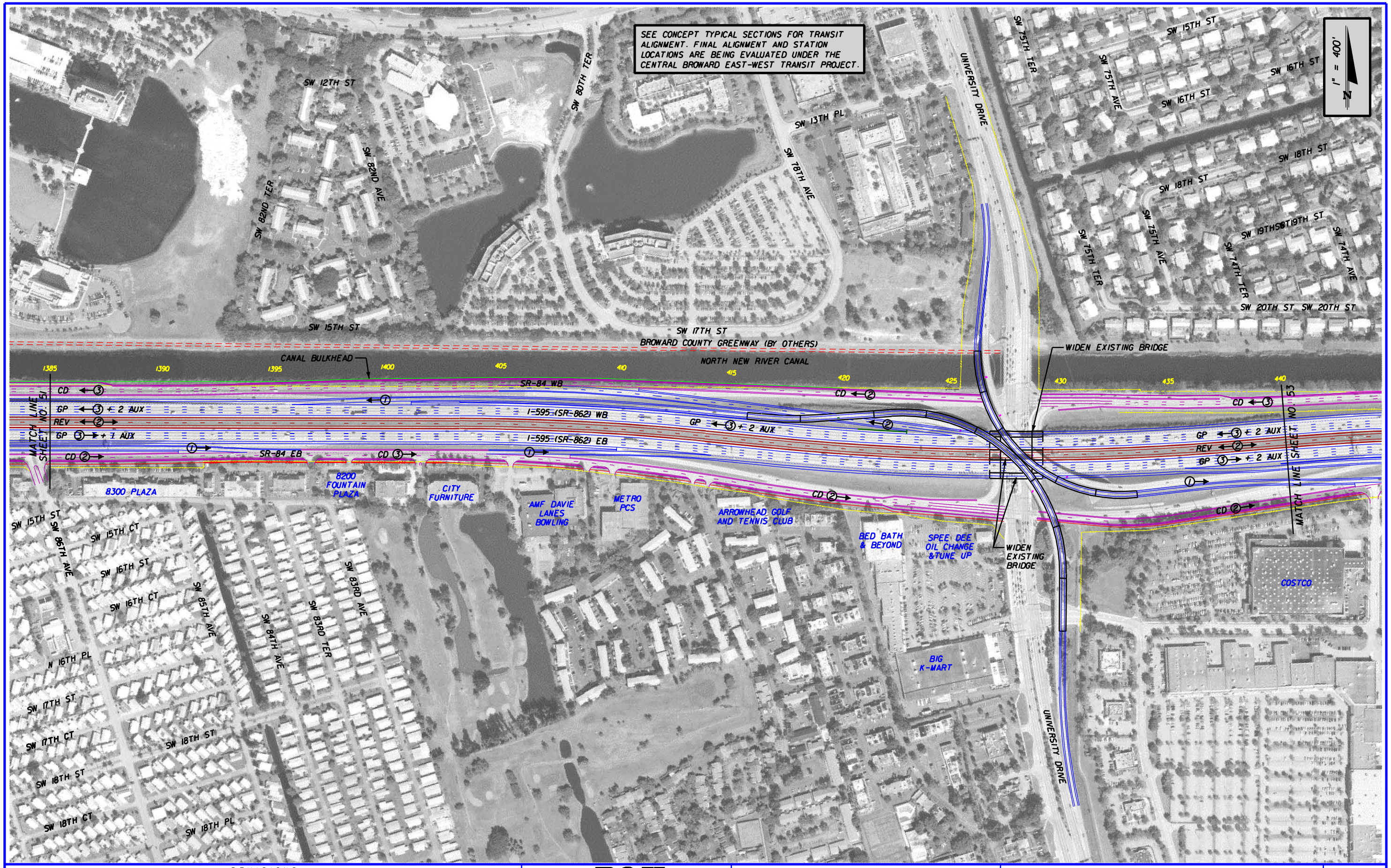

REVISIONS					
DATE	BY	DESCRIPTION	DATE	BY	DESCRIPTION

RS&H
Reynolds, Smith and Hills, Inc.
300 S. Pine Island Road, Suite 300
Plantation, Florida 33324-2619
954-474-3005
FL Cert. No. EB00005620
Phil Schwab, P.E. No. 47555

STATE OF FLORIDA
DEPARTMENT OF TRANSPORTATION

ROAD NO.	COUNTY	FINANCIAL PROJECT ID
862	BROWARD	409354-1-22-01

I-595 PD&E STUDY
ALTERNATIVE 1A PLAN

SHEET NO.
52

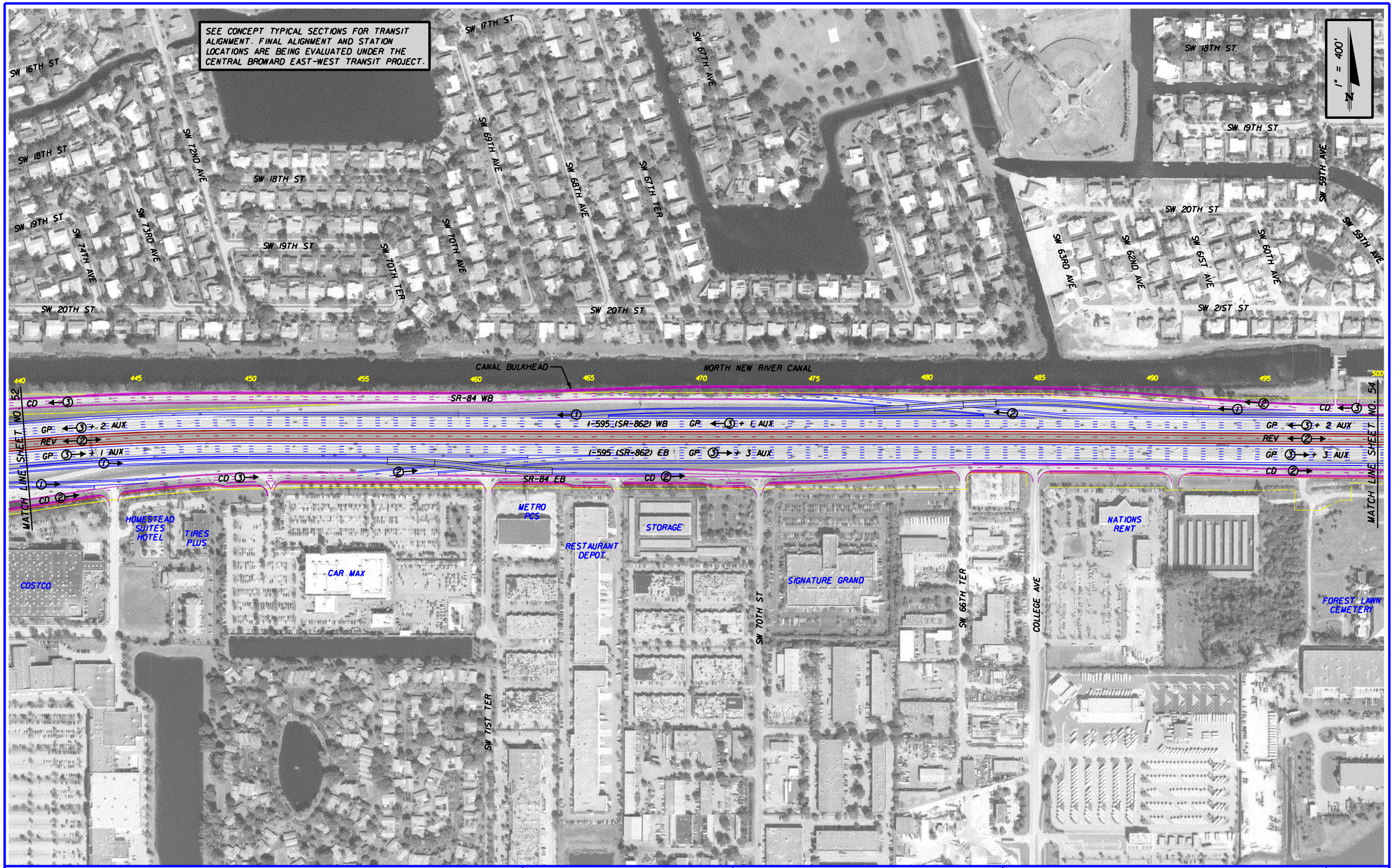

REVISIONS					
DATE	BY	DESCRIPTION	DATE	BY	DESCRIPTION

RS&H
Reynolds, Smith and Hills, Inc.
300 S. Pine Island Road, Suite 300
Plantation, Florida 33324-2619
954-474-3005
FL Cert. No. EB0005620
Phil Schwab, P.E. No. 47555

STATE OF FLORIDA
DEPARTMENT OF TRANSPORTATION

ROAD NO.	COUNTY	FINANCIAL PROJECT ID
862	BROWARD	409354-1-22-01

I-595 PD&E STUDY
ALTERNATIVE 1A PLAN

SHEET NO.
53

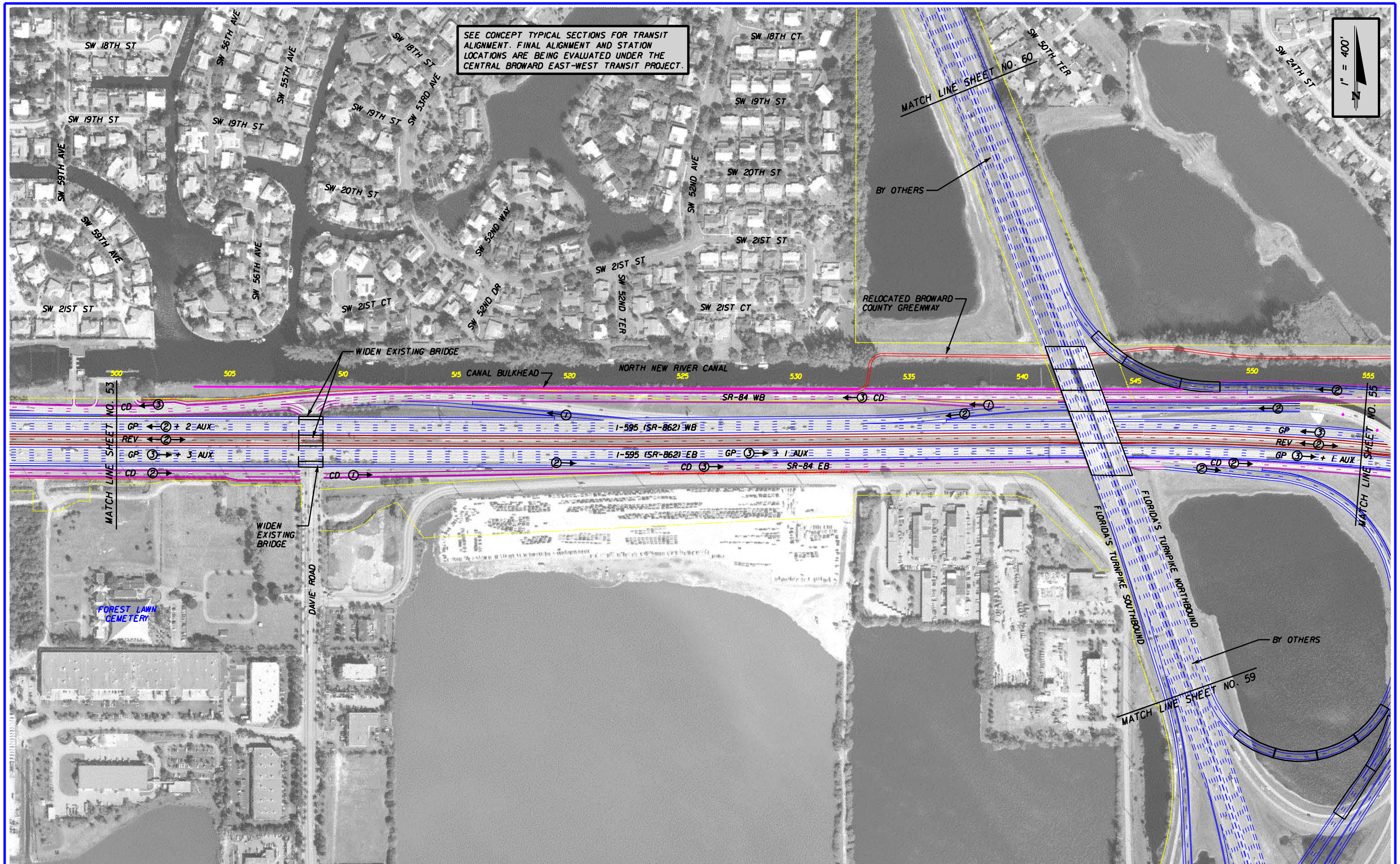

REVISIONS					
DATE	BY	DESCRIPTION	DATE	BY	DESCRIPTION

RS&H
Reynolds, Smith and Hills, Inc.
300 S. Pine Island Road, Suite 300
Plantation, Florida 33324-2619
954-474-3005
FL Cert. No. EB0005620
Phil Schwab, P.E. No. 47555

STATE OF FLORIDA
DEPARTMENT OF TRANSPORTATION

ROAD NO.	COUNTY	FINANCIAL PROJECT ID
862	BROWARD	409354-1-22-01

I-595 PD&E STUDY
ALTERNATIVE 1A PLAN

SHEET NO.
54

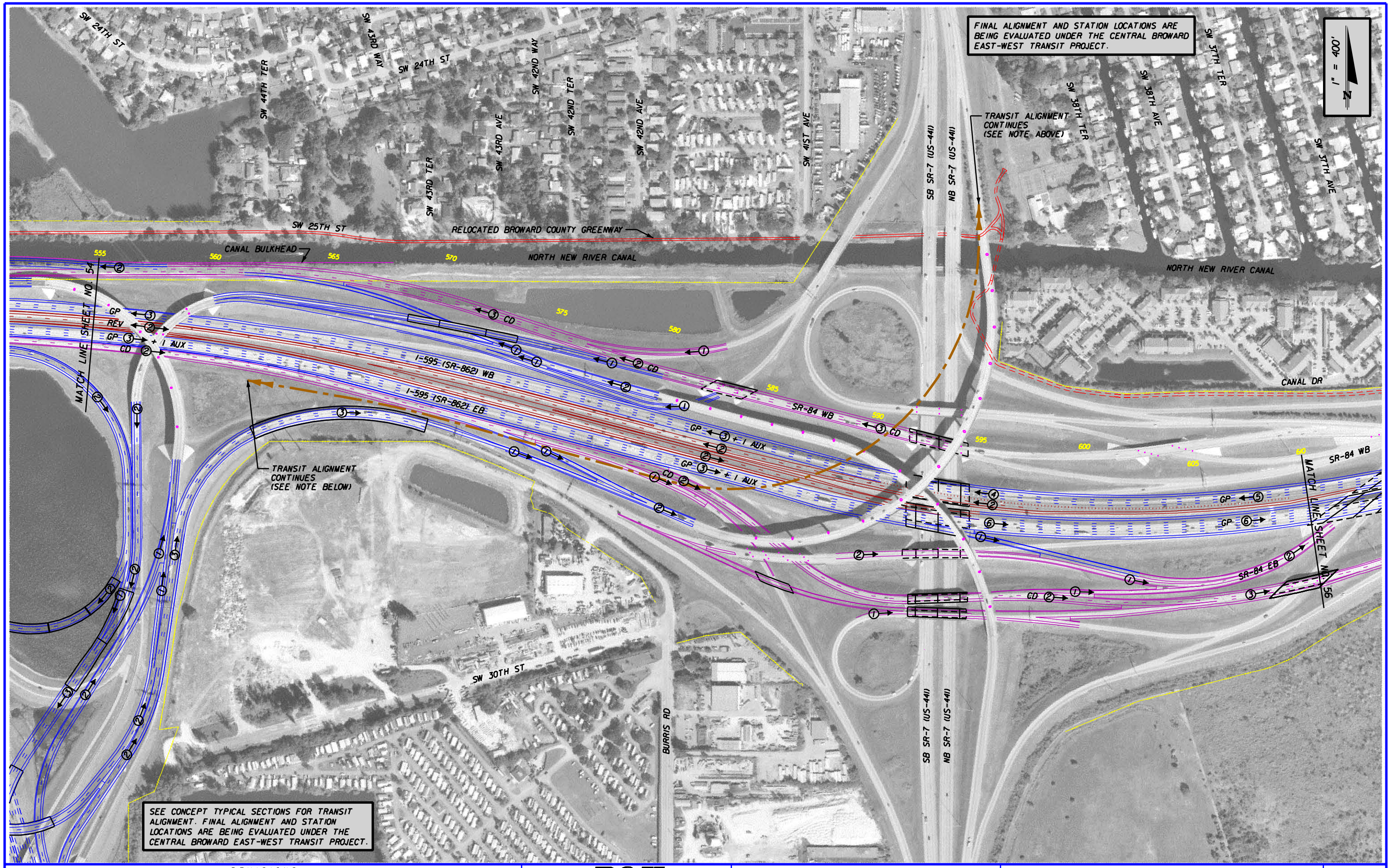

REVISIONS					
DATE	BY	DESCRIPTION	DATE	BY	DESCRIPTION

RS&H
Reynolds, Smith and Hills, Inc.
300 S. Pine Island Road, Suite 300
Plantation, Florida 33324-2619
954-474-3005
FL Cert. No. EB0005620
Phil Schwab, P.E. No. 47555

STATE OF FLORIDA
DEPARTMENT OF TRANSPORTATION

ROAD NO.	COUNTY	FINANCIAL PROJECT ID
862	BROWARD	409354-1-22-01

I-595 PD&E STUDY
ALTERNATIVE 1A PLAN

SHEET NO. 55

$USER$ 2/15/2006 7:45:19 AM x:\projects\11455300\roadway\PE Report\plan1A0.dgn

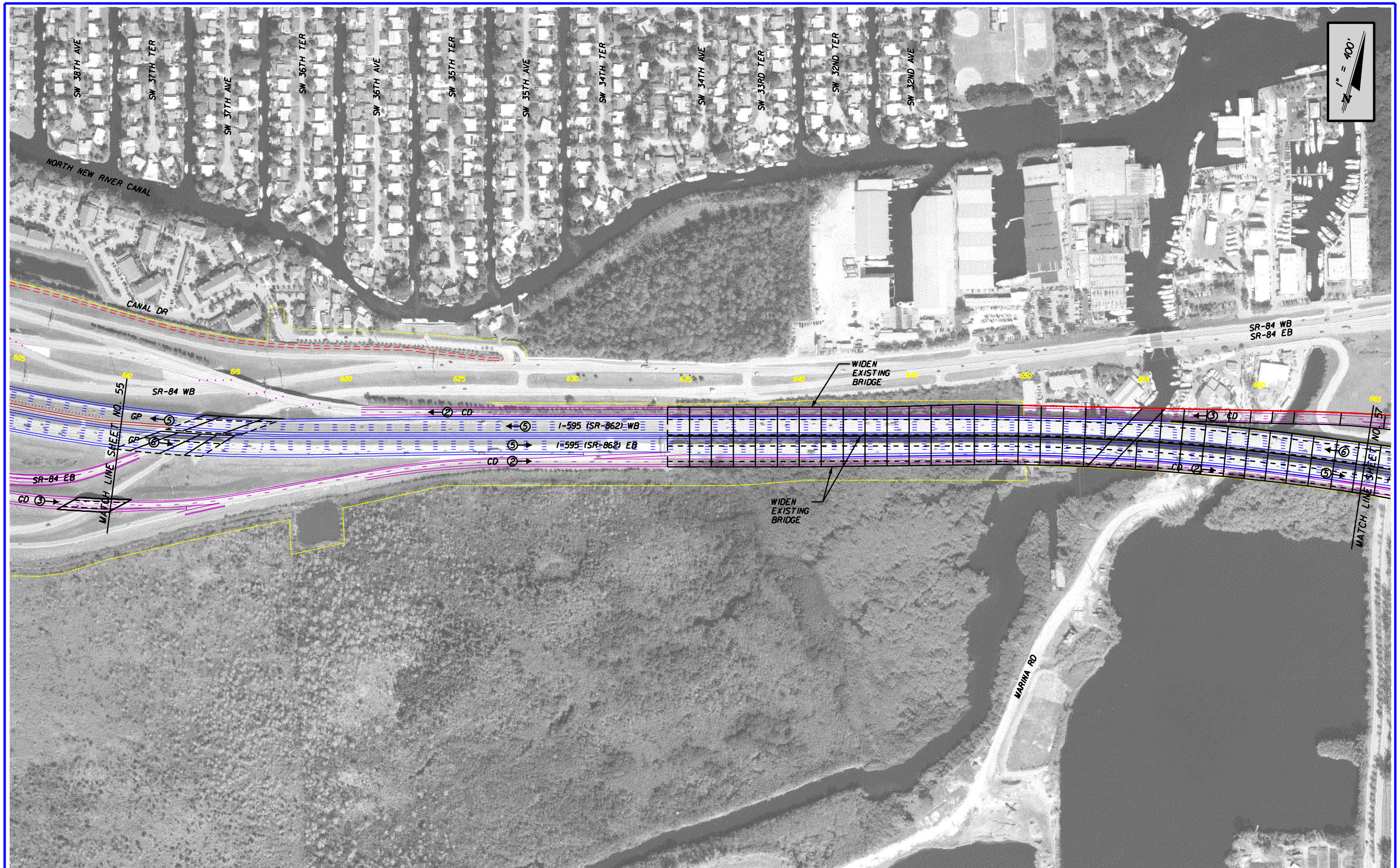

REVISIONS					
DATE	BY	DESCRIPTION	DATE	BY	DESCRIPTION

RS&H
Reynolds, Smith and Hills, Inc.
300 S. Pine Island Road, Suite 300
Plantation, Florida 33324-2619
954-474-3005
FL Cert. No. EB0005620
Phil Schwab, P.E. No. 47555

STATE OF FLORIDA
DEPARTMENT OF TRANSPORTATION

ROAD NO.	COUNTY	FINANCIAL PROJECT ID
862	BROWARD	409354-1-22-01

I-595 PD&E STUDY
ALTERNATIVE 1A PLAN

SHEET NO.
56

@USER@ 2/15/2006 7:45:39 AM x:\projects\IM453006\roadway\PE Report\plan01.dgn

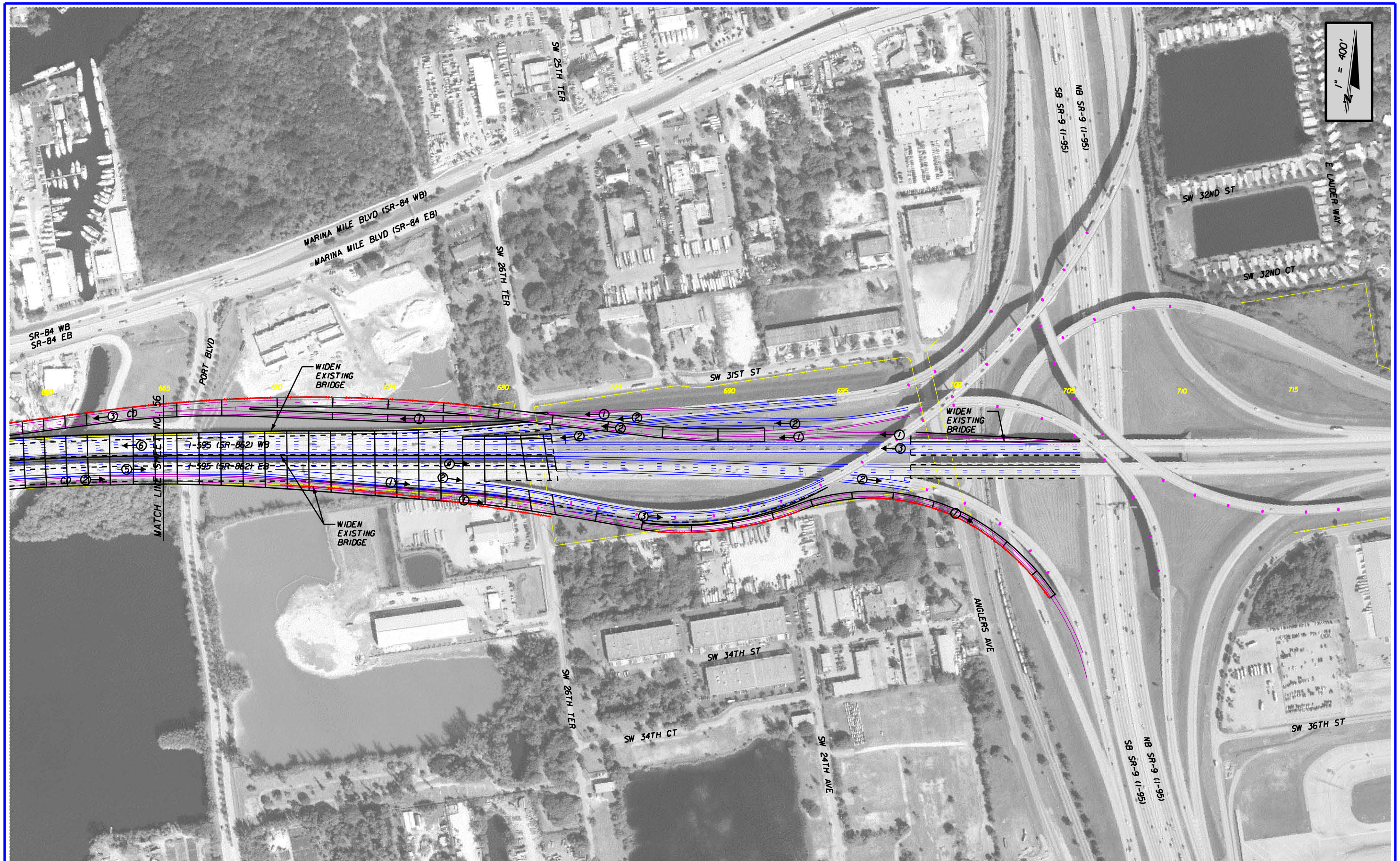

REVISIONS					
DATE	BY	DESCRIPTION	DATE	BY	DESCRIPTION

RS&H
Reynolds, Smith and Hills, Inc.
300 S. Pine Island Road, Suite 300
Plantation, Florida 33324-2619
954-474-3005
FL Cert. No. EB0005620
Phil Schwab, P.E. No. 47555

STATE OF FLORIDA
DEPARTMENT OF TRANSPORTATION

ROAD NO.	COUNTY	FINANCIAL PROJECT ID
862	BROWARD	409354-1-22-01

I-595 PD&E STUDY
ALTERNATIVE 1A PLAN

SHEET NO. 57

REVISIONS					
DATE	BY	DESCRIPTION	DATE	BY	DESCRIPTION

RS&H
Reynolds, Smith and Hills, Inc.
300 S. Pine Island Road, Suite 300
Plantation, Florida 33324-2619
954-474-3005
FL Cert. No. EB0005620
Phil Schwab, P.E. No. 47555

STATE OF FLORIDA
DEPARTMENT OF TRANSPORTATION

ROAD NO.	COUNTY	FINANCIAL PROJECT ID
862	BROWARD	409354-1-22-01

I-595 PD&E STUDY
ALTERNATIVE 1A PLAN

SHEET NO. 58

REVISIONS					
DATE	BY	DESCRIPTION	DATE	BY	DESCRIPTION

RS&H
Reynolds, Smith and Hills, Inc.
300 S. Pine Island Road, Suite 300
Plantation, Florida 33324-2619
954-474-3005
FL Cert. No. EB0005620
Phil Schwab, P.E. No. 47555

STATE OF FLORIDA
DEPARTMENT OF TRANSPORTATION

ROAD NO.	COUNTY	FINANCIAL PROJECT ID
862	BROWARD	409354-1-22-01

I-595 PD&E STUDY
ALTERNATIVE 1A PLAN

SHEET NO.
59

REVISIONS					
DATE	BY	DESCRIPTION	DATE	BY	DESCRIPTION

RS&H
Reynolds, Smith and Hills, Inc.
300 S. Pine Island Road, Suite 300
Plantation, Florida 33324-2619
954-474-3005
FL Cert. No. EB0005620
Phil Schwab, P.E. No. 47555

STATE OF FLORIDA
DEPARTMENT OF TRANSPORTATION

ROAD NO.	COUNTY	FINANCIAL PROJECT ID
862	BROWARD	409354-1-22-01

I-595 PD&E STUDY
ALTERNATIVE 1A PLAN

SHEET NO.
60

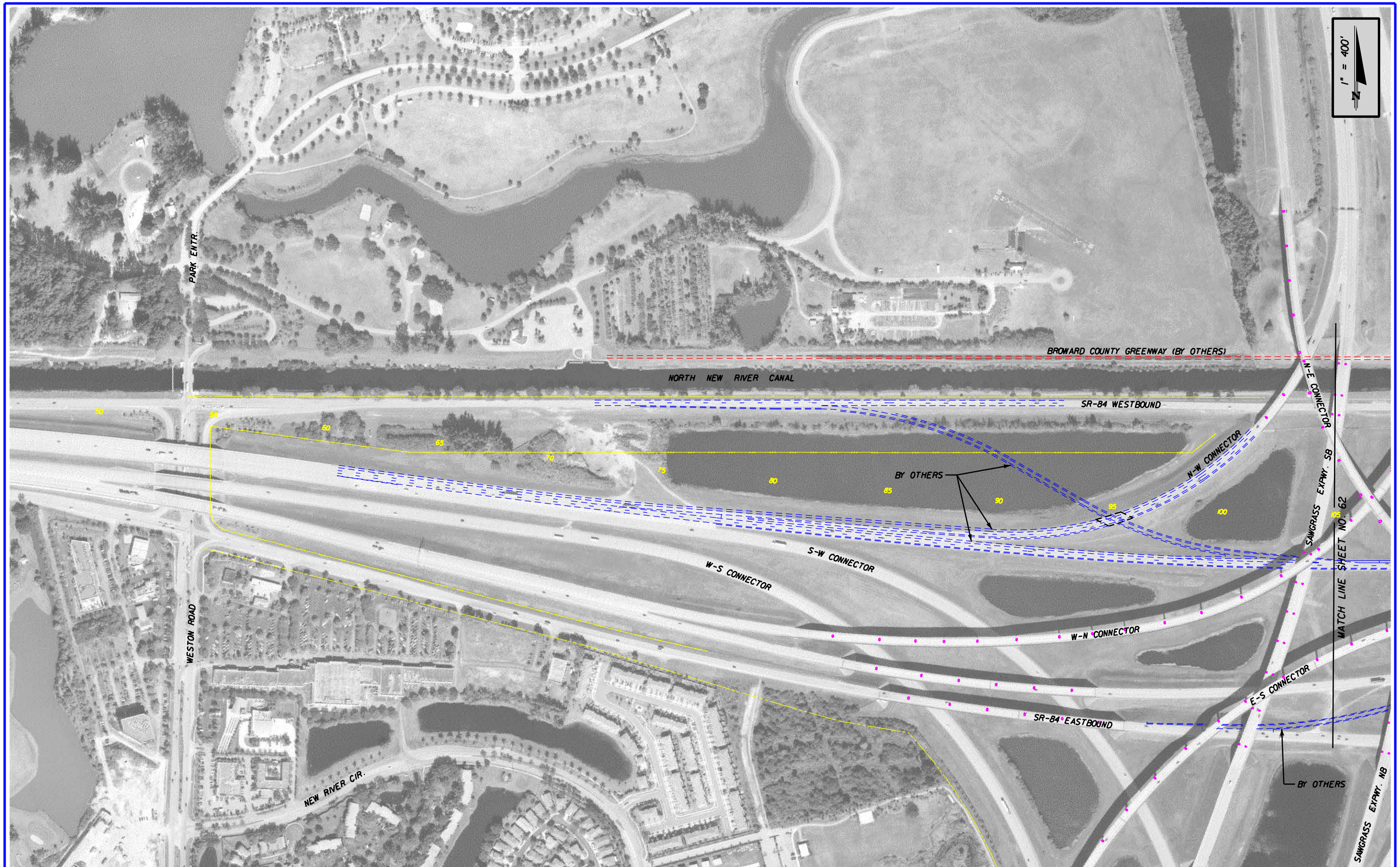

REVISIONS					
DATE	BY	DESCRIPTION	DATE	BY	DESCRIPTION

RS&H
Reynolds, Smith and Hills, Inc.
300 S. Pine Island Road, Suite 300
Plantation, Florida 33324-2619
954-474-3005
FL Cert. No. EB0005620
Phil Schwab, P.E. No. 47555

STATE OF FLORIDA
DEPARTMENT OF TRANSPORTATION

ROAD NO.	COUNTY	FINANCIAL PROJECT ID
862	BROWARD	409354-1-22-01

I-595 PD&E STUDY
ALTERNATIVE 1B PLAN

SHEET NO.
61

$USER$ 2/15/2006 7:47:28 AM x:\projects\11455300\roadway\PE Report\plan1B01.dgn

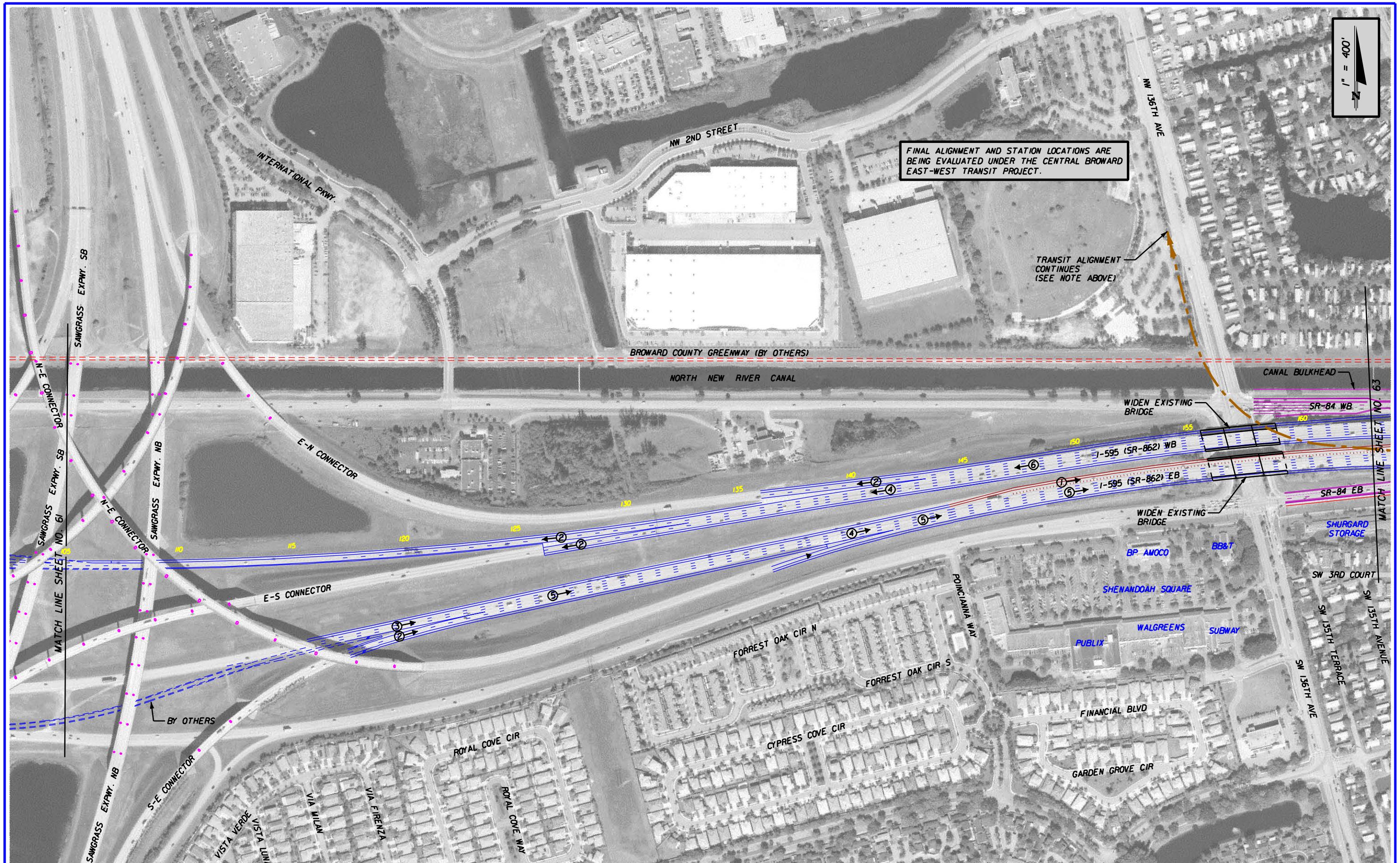

REVISIONS					
DATE	BY	DESCRIPTION	DATE	BY	DESCRIPTION

RS&H
Reynolds, Smith and Hills, Inc.
300 S. Pine Island Road, Suite 300
Plantation, Florida 33324-2619
954-474-3005
FL Cert. No. EB0005620
Phil Schwab, P.E. No. 47555

STATE OF FLORIDA
DEPARTMENT OF TRANSPORTATION

ROAD NO.	COUNTY	FINANCIAL PROJECT ID
862	BROWARD	409354-1-22-01

I-595 PD&E STUDY
ALTERNATIVE 1B PLAN

SHEET NO.
62

FINAL ALIGNMENT AND STATION LOCATIONS ARE BEING EVALUATED UNDER THE CENTRAL BROWARD EAST-WEST TRANSIT PROJECT.

1" = 400'

N

NW 133RD RD
COMMODORE DR
W BROWARD BLVD
NW 127TH AVE
NW 126TH AVE
NW 125TH AVE
NW 1ST CT
NW 1ST PL
NW 2ND ST
FLAMINGO ROAD
SW 122ND AVE
NW 1ST ST
BROWARD COUNTY GREENWAY (BY OTHERS)
CANAL BULKHEAD
NORTH NEW RIVER CANAL
160 165 170 175 180 1185 1190 1195 1200 1205 1210 1215
SR-84 WB
I-595 (SR-862) WB
I-595 (SR-862) EB
SR-84 EB
SR-84 EB
MATCH LINE SHEET NO. 62
MATCH LINE SHEET NO. 64
WIDEN EXISTING BRIDGE
WIDEN EXISTING BRIDGE
SHURGARD STORAGE
U STORE STORAGE
DUNKIN' DONUTS
EXXON
MCDONALD'S
STRIP MALL
FOR LEASE
PARADISE VILLAGE
TRANSIT ALIGNMENT (SEE NOTE ABOVE)
ANDY'S LOUNGE
CUMBERLAND FARMS
SW 3RD COURT
SW 4TH ST
SW 4TH COURT
SW 133RD AVENUE
SW 133RD TERRACE
SW 134TH AVENUE
SW 135TH TERRACE
SW 135TH AVENUE
SW 134TH WAY
SW 136TH AVE
SW 132ND TERRACE
SW 132ND AVENUE
SW 131ST TERRACE
SW 131ST AVENUE
SW 130TH TERRACE
SW 130TH AVENUE
SW 125TH AVE
SW 5TH ST
SW 5TH CT
SW 6TH ST
SW 6TH CT
SW 7TH ST
SW 7TH CT
SW 7TH PL
SW 126TH TER
SW 124TH TER
FLAMINGO ROAD

REVISIONS					
DATE	BY	DESCRIPTION	DATE	BY	DESCRIPTION

RS&H
Reynolds, Smith and Hills, Inc.
300 S. Pine Island Road, Suite 300
Plantation, Florida 33324-2619
954-474-3005
FL Cert. No. EB0005620
Phil Schwab, P.E. No. 47555

STATE OF FLORIDA
DEPARTMENT OF TRANSPORTATION

ROAD NO.	COUNTY	FINANCIAL PROJECT ID
862	BROWARD	409354-1-22-01

I-595 PD&E STUDY
ALTERNATIVE 1B PLAN

SHEET NO.
63

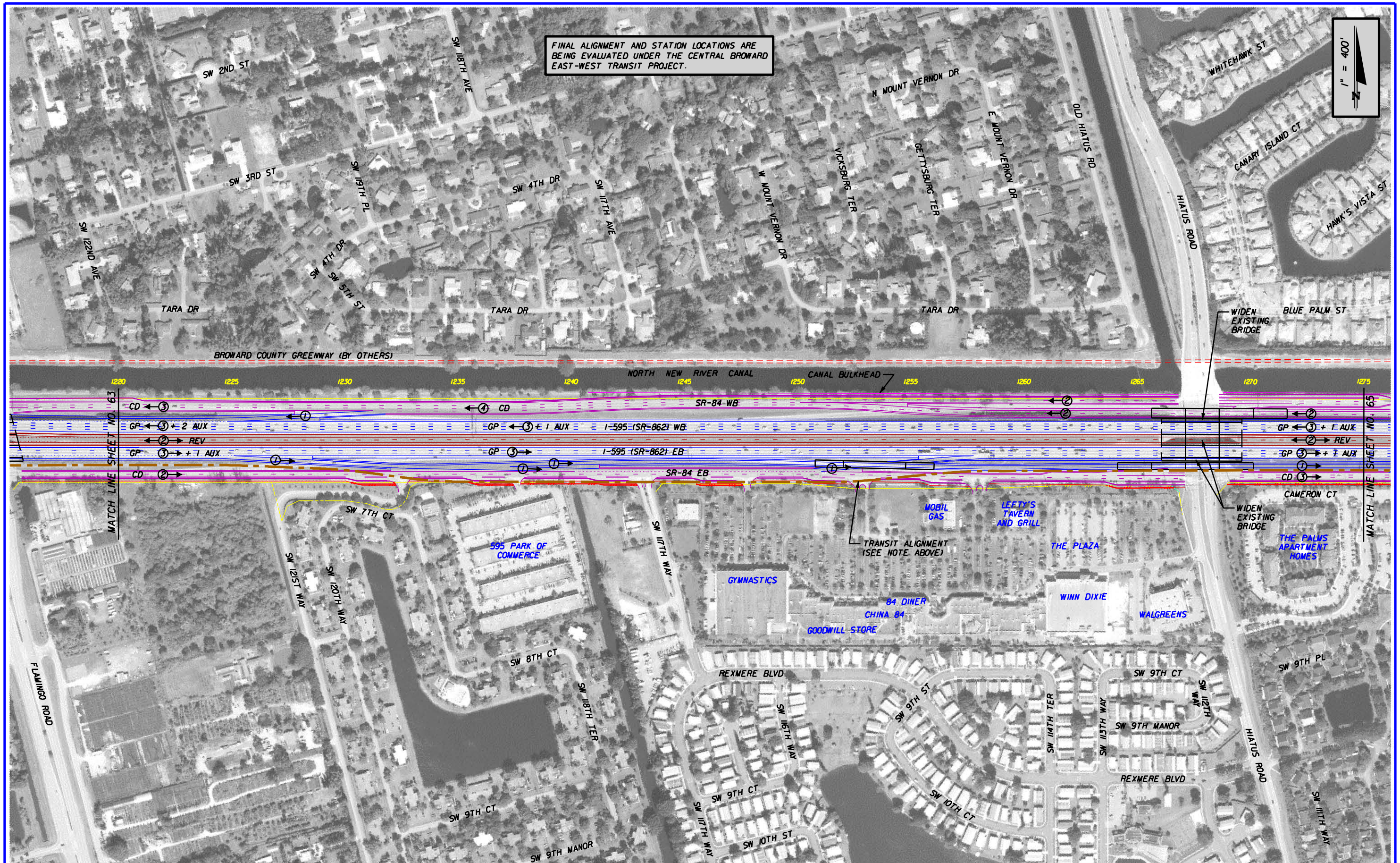

REVISIONS					
DATE	BY	DESCRIPTION	DATE	BY	DESCRIPTION

RS&H
Reynolds, Smith and Hills, Inc.
300 S. Pine Island Road, Suite 300
Plantation, Florida 33324-2619
954-474-3005
FL Cert. No. EB0005620
Phil Schwab, P.E. No. 47555

STATE OF FLORIDA
DEPARTMENT OF TRANSPORTATION

ROAD NO.	COUNTY	FINANCIAL PROJECT ID
862	BROWARD	409354-1-22-01

I-595 PD&E STUDY
ALTERNATIVE 1B PLAN

SHEET NO.
64

$USER$ 2/15/2006 7:48:38 AM x:\projects\11145530\roadway\PE_Report\plan1B04.dgn

REVISIONS					
DATE	BY	DESCRIPTION	DATE	BY	DESCRIPTION

RS&H
Reynolds, Smith and Hills, Inc.
300 S. Pine Island Road, Suite 300
Plantation, Florida 33324-2619
954-474-3005
FL Cert. No. EB0005620
Phil Schwab, P.E. No. 47555

STATE OF FLORIDA
DEPARTMENT OF TRANSPORTATION

ROAD NO.	COUNTY	FINANCIAL PROJECT ID
862	BROWARD	409354-1-22-01

I-595 PD&E STUDY
ALTERNATIVE 1B PLAN

SHEET NO.
65

$USER$ 2/15/2006 7:48:56 AM x:\projects\11455300\roadway\PE Report\plan\B05.dgn

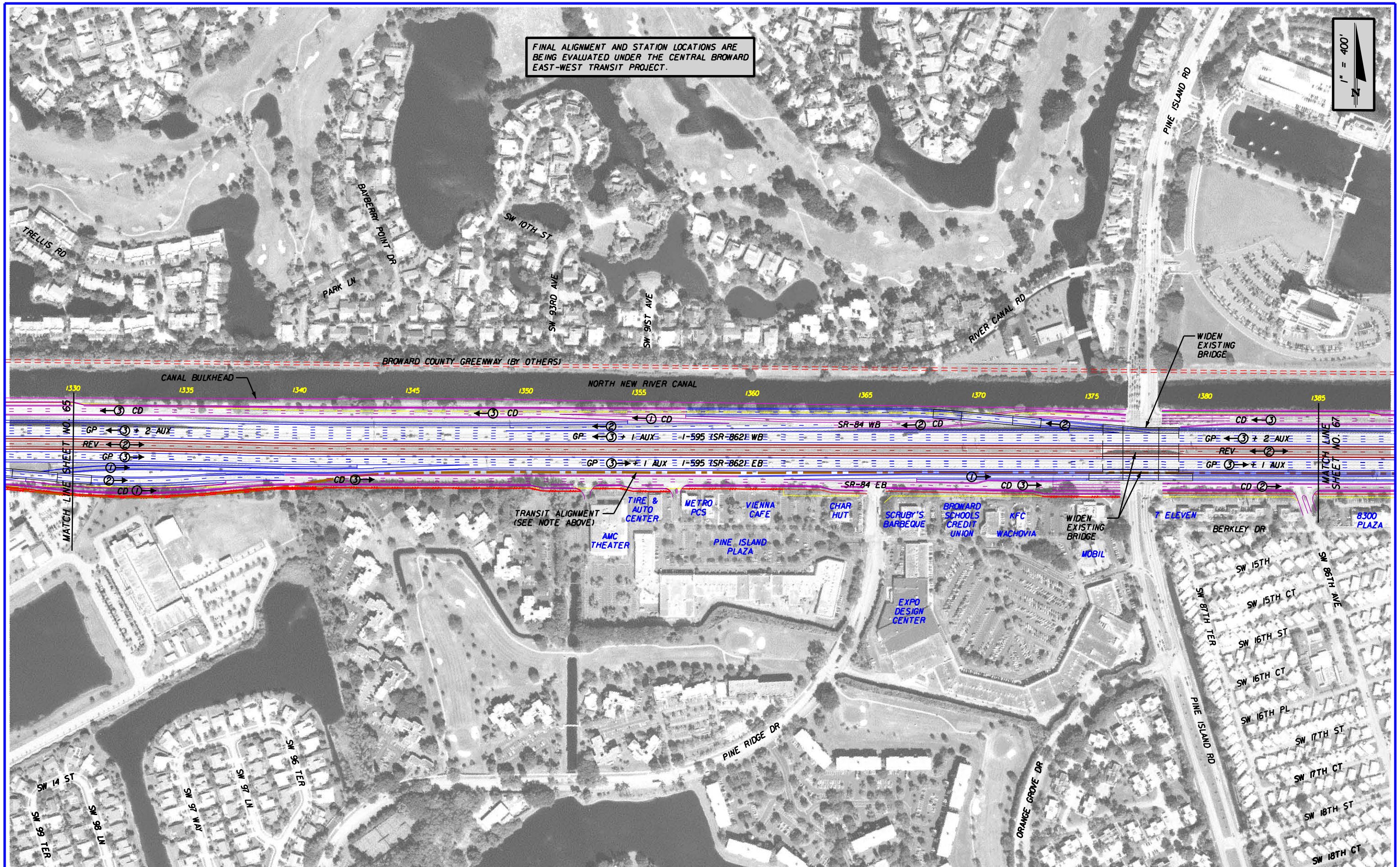

REVISIONS					
DATE	BY	DESCRIPTION	DATE	BY	DESCRIPTION

RS&H
Reynolds, Smith and Hills, Inc.
300 S. Pine Island Road, Suite 300
Plantation, Florida 33324-2619
954-474-3005
FL Cert. No. EB0005620
Phil Schwab, P.E. No. 47555

STATE OF FLORIDA
DEPARTMENT OF TRANSPORTATION

ROAD NO.	COUNTY	FINANCIAL PROJECT ID
862	BROWARD	409354-1-22-01

I-595 PD&E STUDY
ALTERNATIVE 1B PLAN

SHEET NO.
66

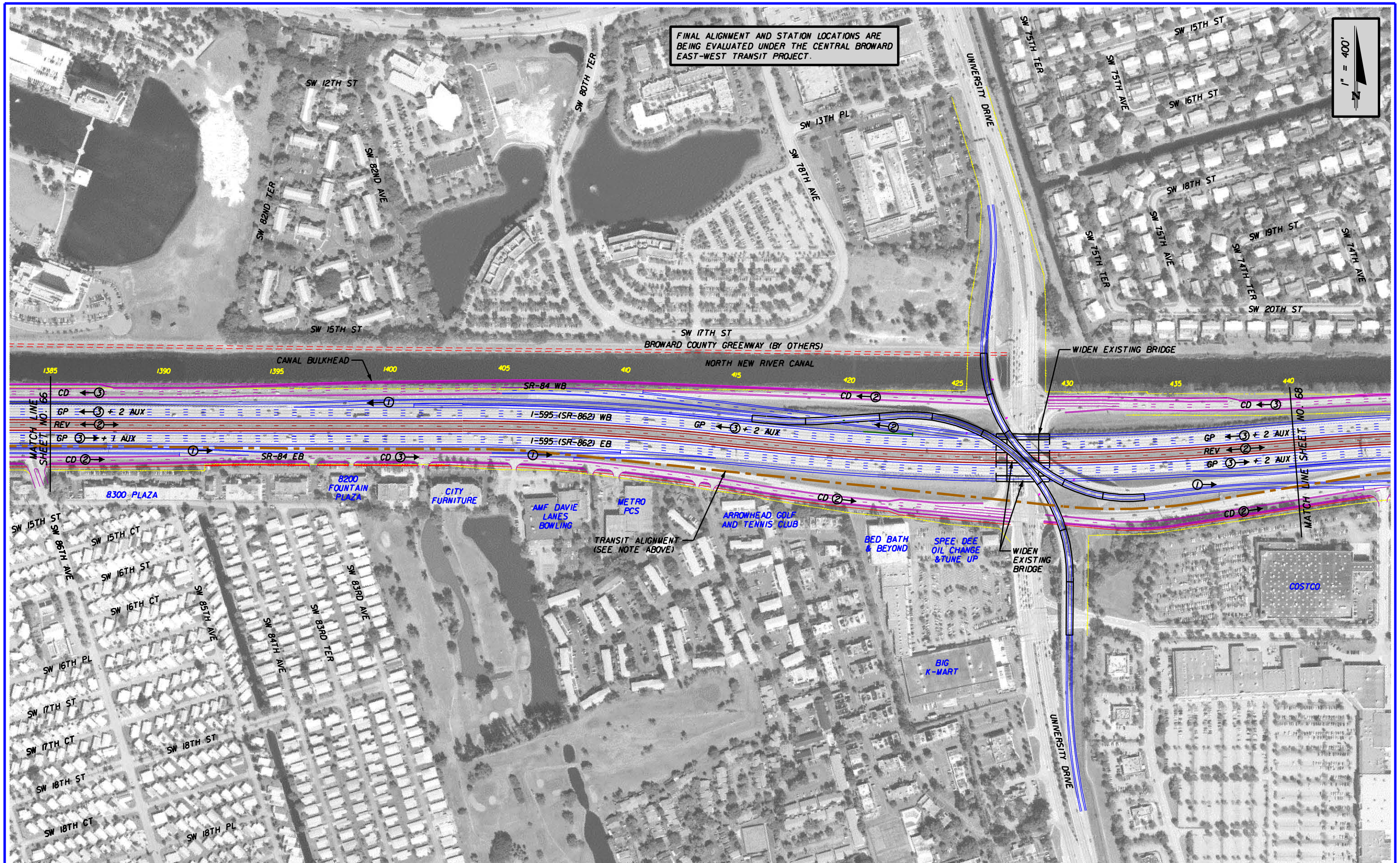

REVISIONS					
DATE	BY	DESCRIPTION	DATE	BY	DESCRIPTION

RS&H
Reynolds, Smith and Hills, Inc.
300 S. Pine Island Road, Suite 300
Plantation, Florida 33324-2619
954-474-3005
FL Cert. No. EB0005620
Phil Schwab, P.E. No. 47555

STATE OF FLORIDA
DEPARTMENT OF TRANSPORTATION

ROAD NO.	COUNTY	FINANCIAL PROJECT ID
862	BROWARD	409354-1-22-01

I-595 PD&E STUDY
ALTERNATIVE 1B PLAN

SHEET NO.
67

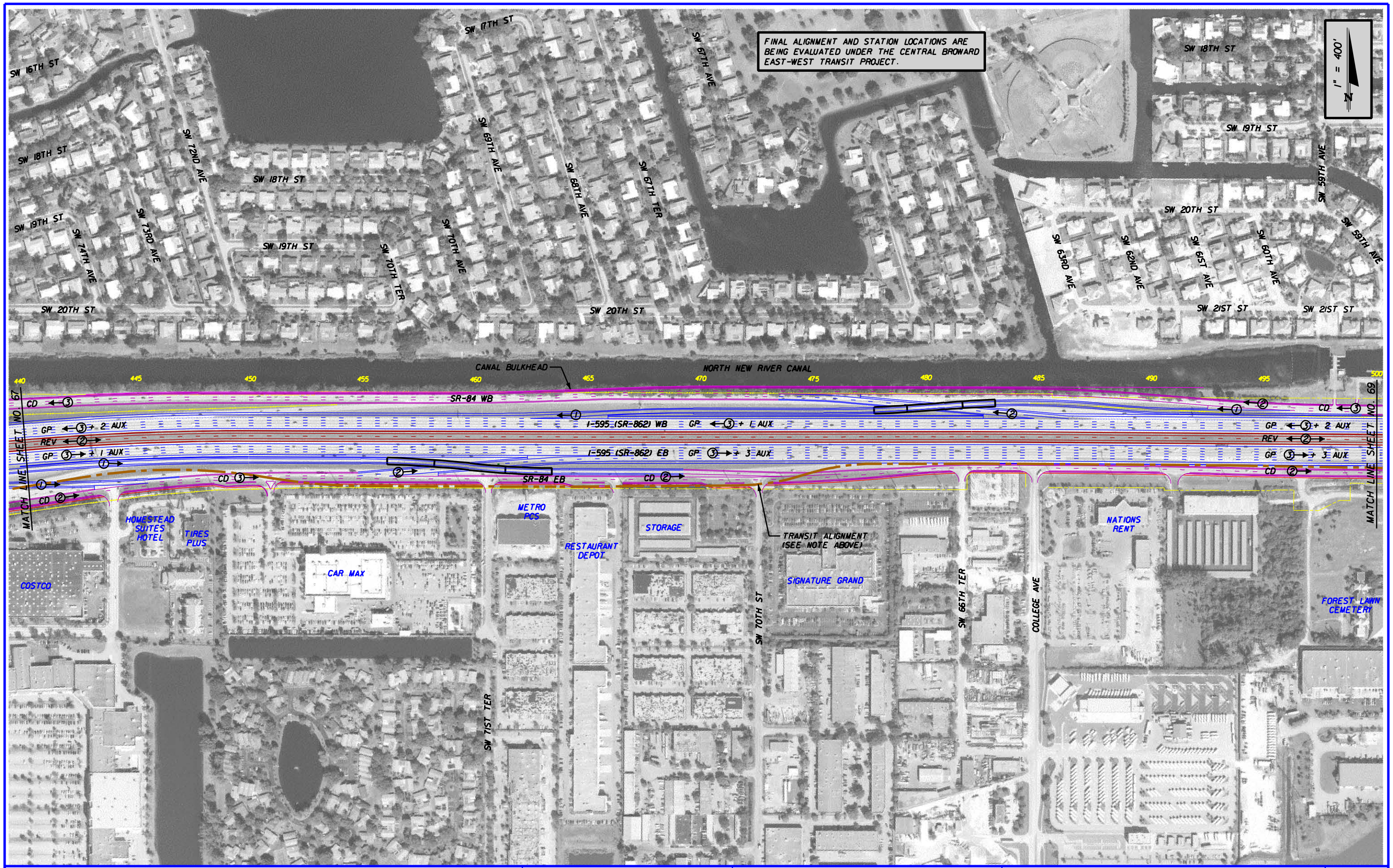

REVISIONS					
DATE	BY	DESCRIPTION	DATE	BY	DESCRIPTION

RS&H
Reynolds, Smith and Hills, Inc.
300 S. Pine Island Road, Suite 300
Plantation, Florida 33324-2619
954-474-3005
FL Cert. No. EB0005620
Phil Schwab, P.E. No. 47555

STATE OF FLORIDA
DEPARTMENT OF TRANSPORTATION

ROAD NO.	COUNTY	FINANCIAL PROJECT ID
862	BROWARD	409354-1-22-01

I-595 PD&E STUDY
ALTERNATIVE 1B PLAN

SHEET NO. 68

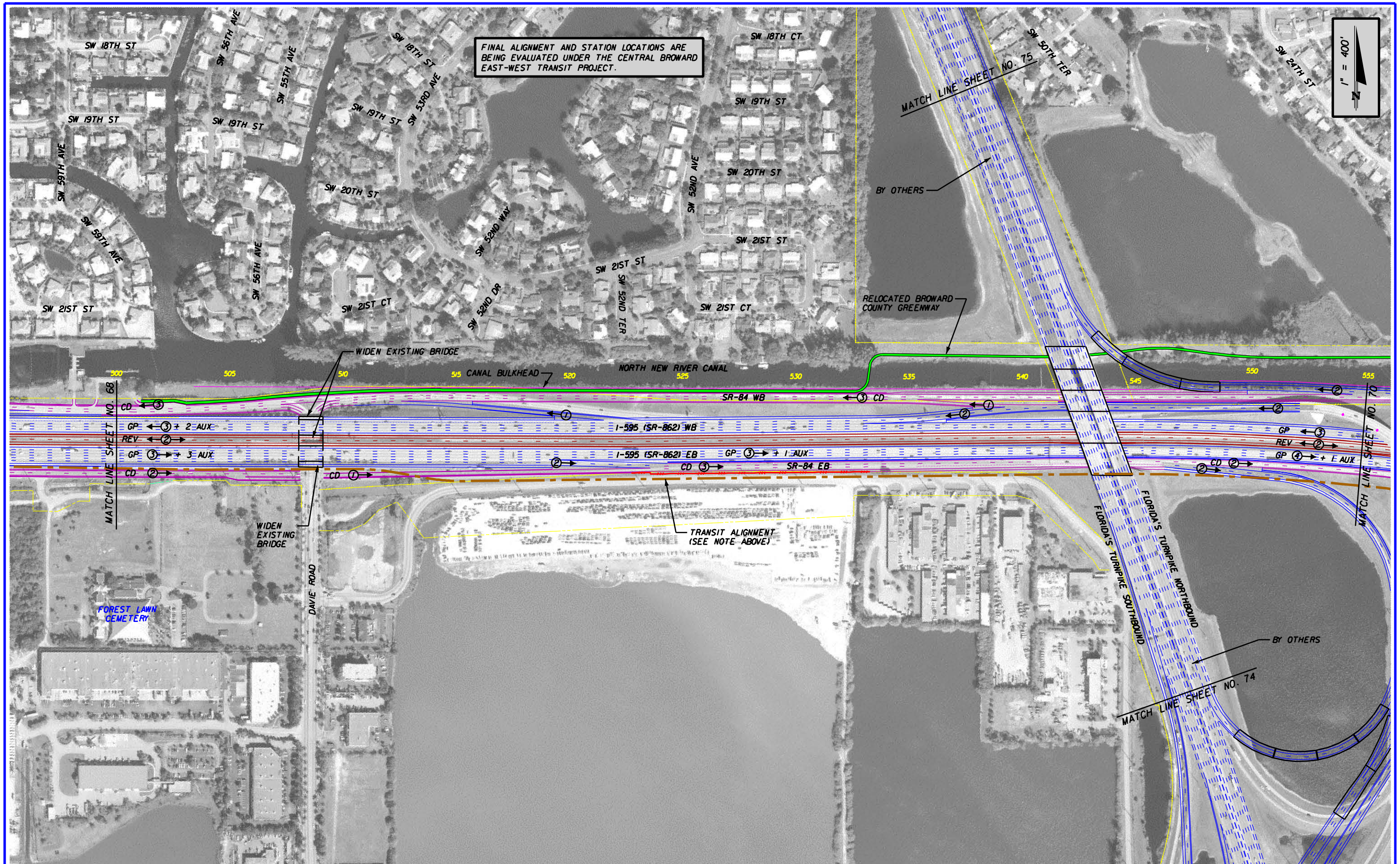

REVISIONS					
DATE	BY	DESCRIPTION	DATE	BY	DESCRIPTION

RS&H
Reynolds, Smith and Hills, Inc.
300 S. Pine Island Road, Suite 300
Plantation, Florida 33324-2619
954-474-3005
FL Cert. No. EB0005620
Phil Schwab, P.E. No. 47555

STATE OF FLORIDA
DEPARTMENT OF TRANSPORTATION

ROAD NO.	COUNTY	FINANCIAL PROJECT ID
862	BROWARD	409354-1-22-01

I-595 PD&E STUDY
ALTERNATIVE 1B PLAN

SHEET NO.
69

FINAL ALIGNMENT AND STATION LOCATIONS ARE BEING EVALUATED UNDER THE CENTRAL BROWARD EAST-WEST TRANSIT PROJECT.

1" = 400'

N

SW 24TH ST
SW 44TH TER
SW 43RD WAY
SW 24TH ST
SW 42ND WAY
SW 42ND TER
SW 43RD AVE
SW 43RD TER
SW 42ND AVE
SW 41ST AVE
SB SR-7 (US-441)
NB SR-7 (US-441)
SW 38TH TER
SW 38TH AVE
SW 37TH TER
SW 37TH AVE
BROWARD COUNTY GREENWAY
SW 25TH ST
RELOCATED BROWARD COUNTY GREENWAY
CANAL BULKHEAD
NORTH NEW RIVER CANAL
TRANSIT ALIGNMENT CONTINUES (SEE NOTE ABOVE)
CANAL DR
MATCH LINE SHEET NO. 69
MATCH LINE SHEET NO. 71
I-595 (SR-862) WB
I-595 (SR-862) EB
SR-84 WB
SR-84 EB
GP
REV
CD
+ 1 AUX
SW 30TH ST
BURRIS RD

REVISIONS					
DATE	BY	DESCRIPTION	DATE	BY	DESCRIPTION

RS&H
Reynolds, Smith and Hills, Inc.
300 S. Pine Island Road, Suite 300
Plantation, Florida 33324-2619
954-474-3005
FL Cert. No. EB0005620
Phil Schwab, P.E. No. 47555

STATE OF FLORIDA
DEPARTMENT OF TRANSPORTATION

ROAD NO.	COUNTY	FINANCIAL PROJECT ID
862	BROWARD	409354-1-22-01

I-595 PD&E STUDY
ALTERNATIVE 1B PLAN

SHEET NO. 70

$USER$ 2/15/2006 7:50:41 AM X:\projects\11145530\roadway\PE Report\plan1B10.dgn

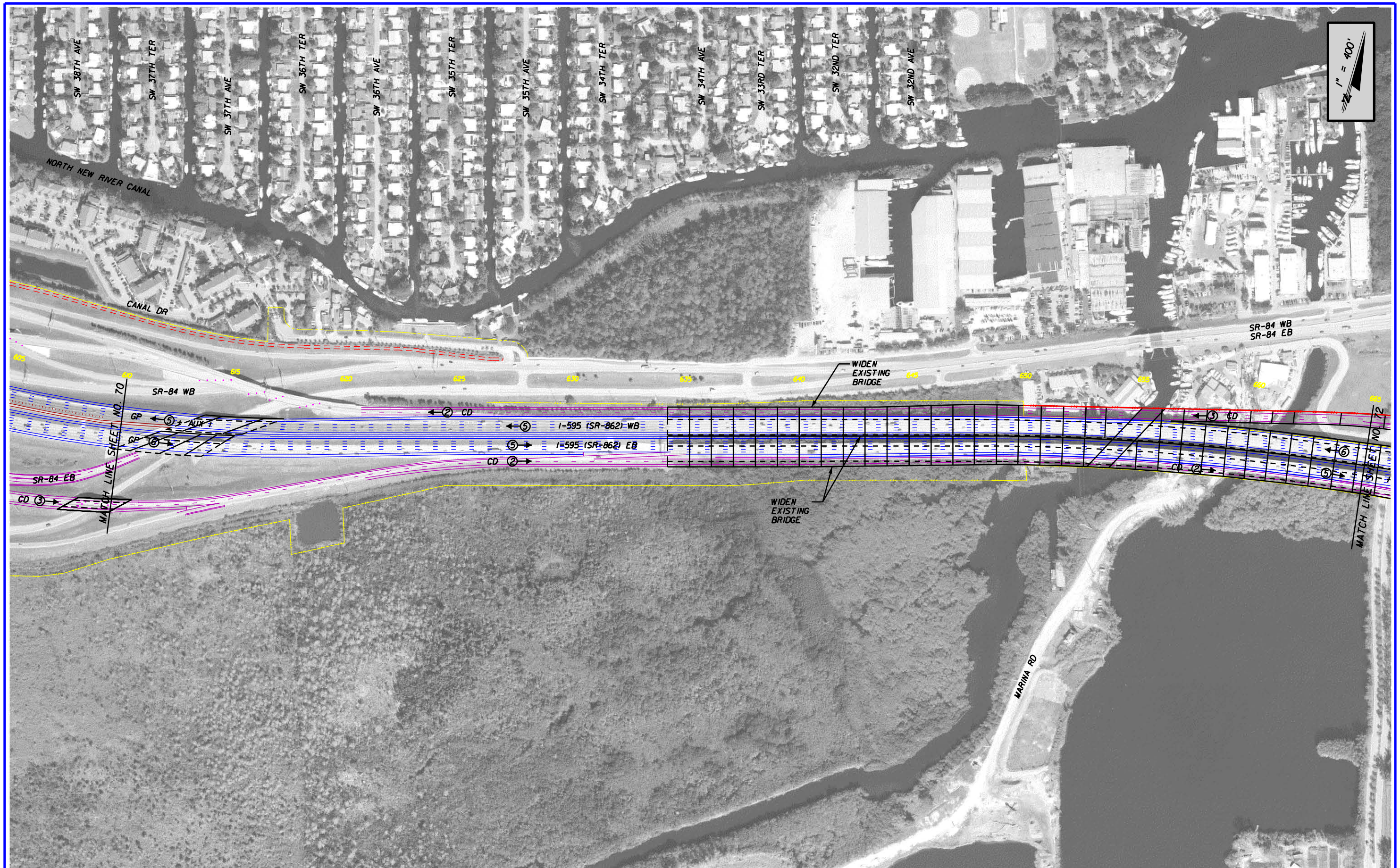

REVISIONS					
DATE	BY	DESCRIPTION	DATE	BY	DESCRIPTION

RS&H
Reynolds, Smith and Hills, Inc.
300 S. Pine Island Road, Suite 300
Plantation, Florida 33324-2619
954-474-3005
FL Cert. No. EB0005620
Phil Schwab, P.E. No. 47555

STATE OF FLORIDA
DEPARTMENT OF TRANSPORTATION

ROAD NO.	COUNTY	FINANCIAL PROJECT ID
862	BROWARD	409354-1-22-01

I-595 PD&E STUDY
ALTERNATIVE 1B PLAN

SHEET NO.
71

@USER@ 2/15/2006 7:51:01 AM x:\projects\IM453606\roadway\PE Report\plan81.dgn

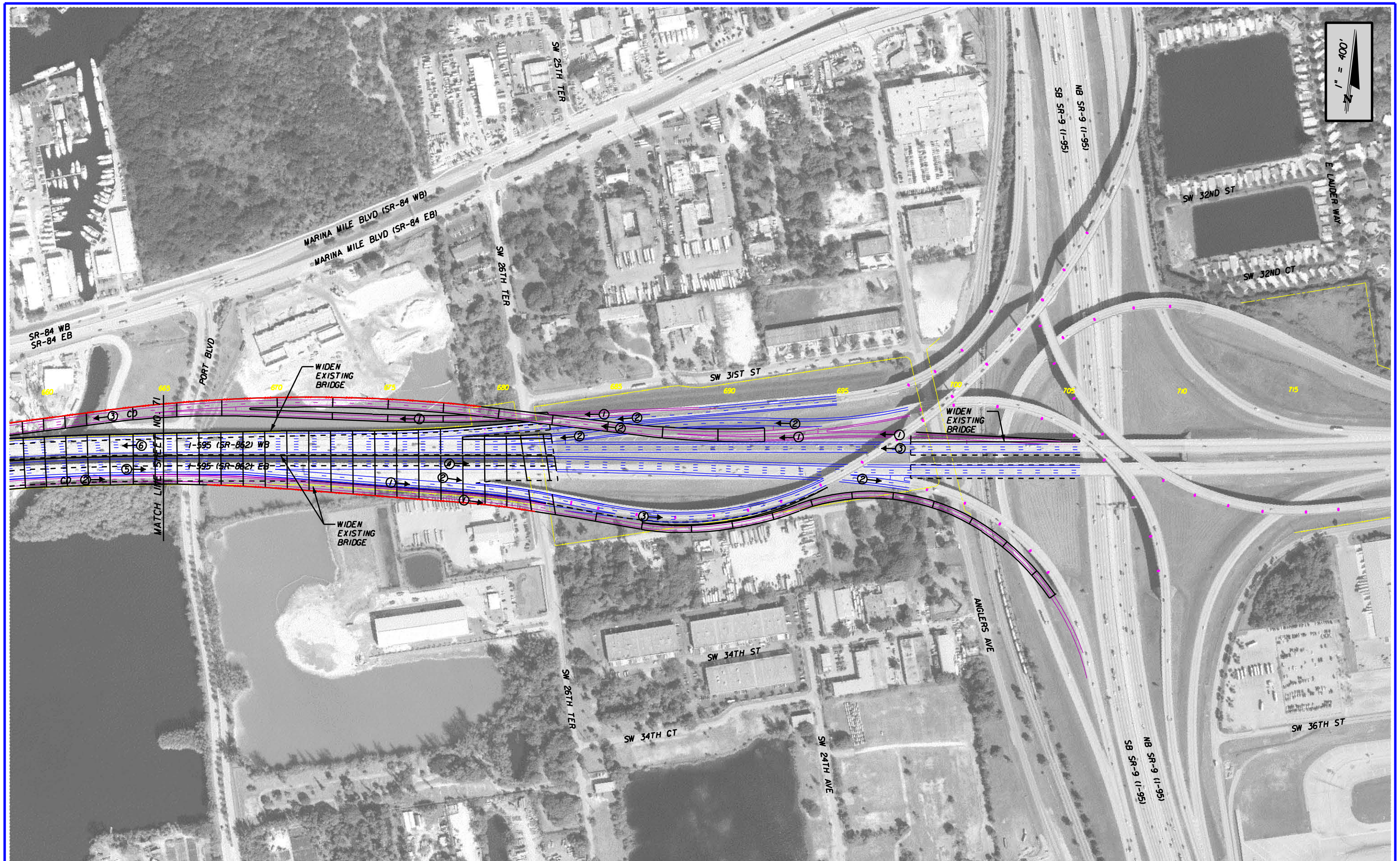

REVISIONS					
DATE	BY	DESCRIPTION	DATE	BY	DESCRIPTION

RS&H
Reynolds, Smith and Hills, Inc.
300 S. Pine Island Road, Suite 300
Plantation, Florida 33324-2619
954-474-3005
FL Cert. No. EB0005620
Phil Schwab, P.E. No. 47555

STATE OF FLORIDA
DEPARTMENT OF TRANSPORTATION

ROAD NO.	COUNTY	FINANCIAL PROJECT ID
862	BROWARD	409354-1-22-01

I-595 PD&E STUDY
ALTERNATIVE 1B PLAN

SHEET NO. 72

REVISIONS					
DATE	BY	DESCRIPTION	DATE	BY	DESCRIPTION

RS&H
Reynolds, Smith and Hills, Inc.
300 S. Pine Island Road, Suite 300
Plantation, Florida 33324-2619
954-474-3005
FL Cert. No. EB0005620
Phil Schwab, P.E. No. 47555

STATE OF FLORIDA
DEPARTMENT OF TRANSPORTATION

ROAD NO.	COUNTY	FINANCIAL PROJECT ID
862	BROWARD	409354-1-22-01

I-595 PD&E STUDY
ALTERNATIVE 1B PLAN

SHEET NO.
73

REVISIONS					
DATE	BY	DESCRIPTION	DATE	BY	DESCRIPTION

RS&H
Reynolds, Smith and Hills, Inc.
300 S. Pine Island Road, Suite 300
Plantation, Florida 33324-2619
954-474-3005
Fl. Cert. No. EB0005620
Phil Schwab, P.E. No. 47555

STATE OF FLORIDA
DEPARTMENT OF TRANSPORTATION

ROAD NO.	COUNTY	FINANCIAL PROJECT ID
862	BROWARD	409354-1-22-01

I-595 PD&E STUDY
ALTERNATIVE 1B PLAN

SHEET NO.
74

REVISIONS					
DATE	BY	DESCRIPTION	DATE	BY	DESCRIPTION

RS&H
Reynolds, Smith and Hills, Inc.
300 S. Pine Island Road, Suite 300
Plantation, Florida 33324-2619
954-474-3005
FL Cert. No. EB0005620
Phil Schwab, P.E. No. 47555

STATE OF FLORIDA
DEPARTMENT OF TRANSPORTATION

ROAD NO.	COUNTY	FINANCIAL PROJECT ID
862	BROWARD	409354-1-22-01

I-595 PD&E STUDY
ALTERNATIVE 1B PLAN

SHEET NO.
75

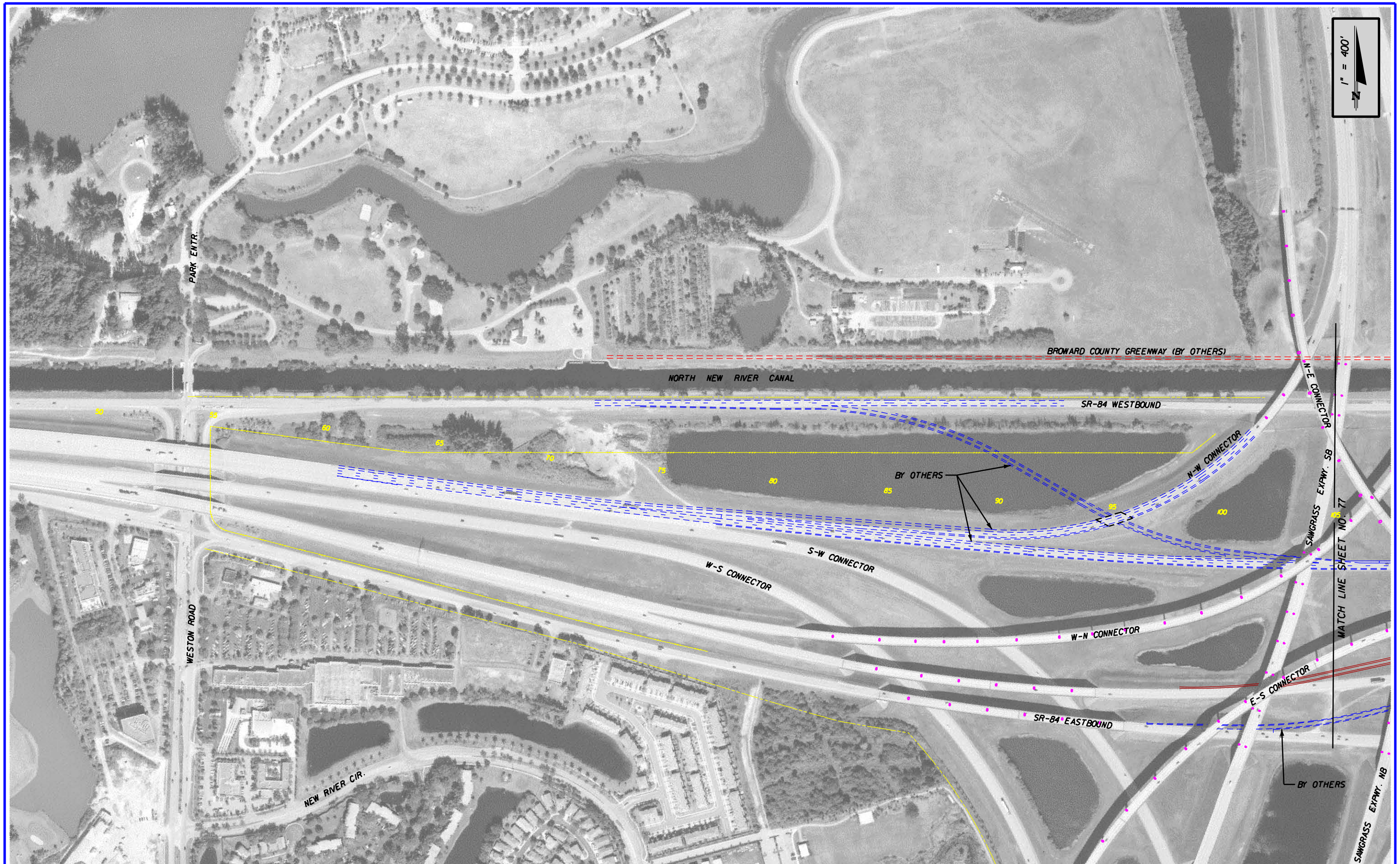

REVISIONS					
DATE	BY	DESCRIPTION	DATE	BY	DESCRIPTION

RS&H
Reynolds, Smith and Hills, Inc.
300 S. Pine Island Road, Suite 300
Plantation, Florida 33324-2619
954-474-3005
FL Cert. No. EB0005620
Phil Schwab, P.E. No. 47555

STATE OF FLORIDA
DEPARTMENT OF TRANSPORTATION

ROAD NO.	COUNTY	FINANCIAL PROJECT ID
862	BROWARD	409354-1-22-01

I-595 PD&E STUDY
ALTERNATIVE 2A PLAN

SHEET NO.
76

$USER$ 2/15/2006 7:53:07 AM X:\projects\11455300\roadway\PE Report\plan2A01.dgn

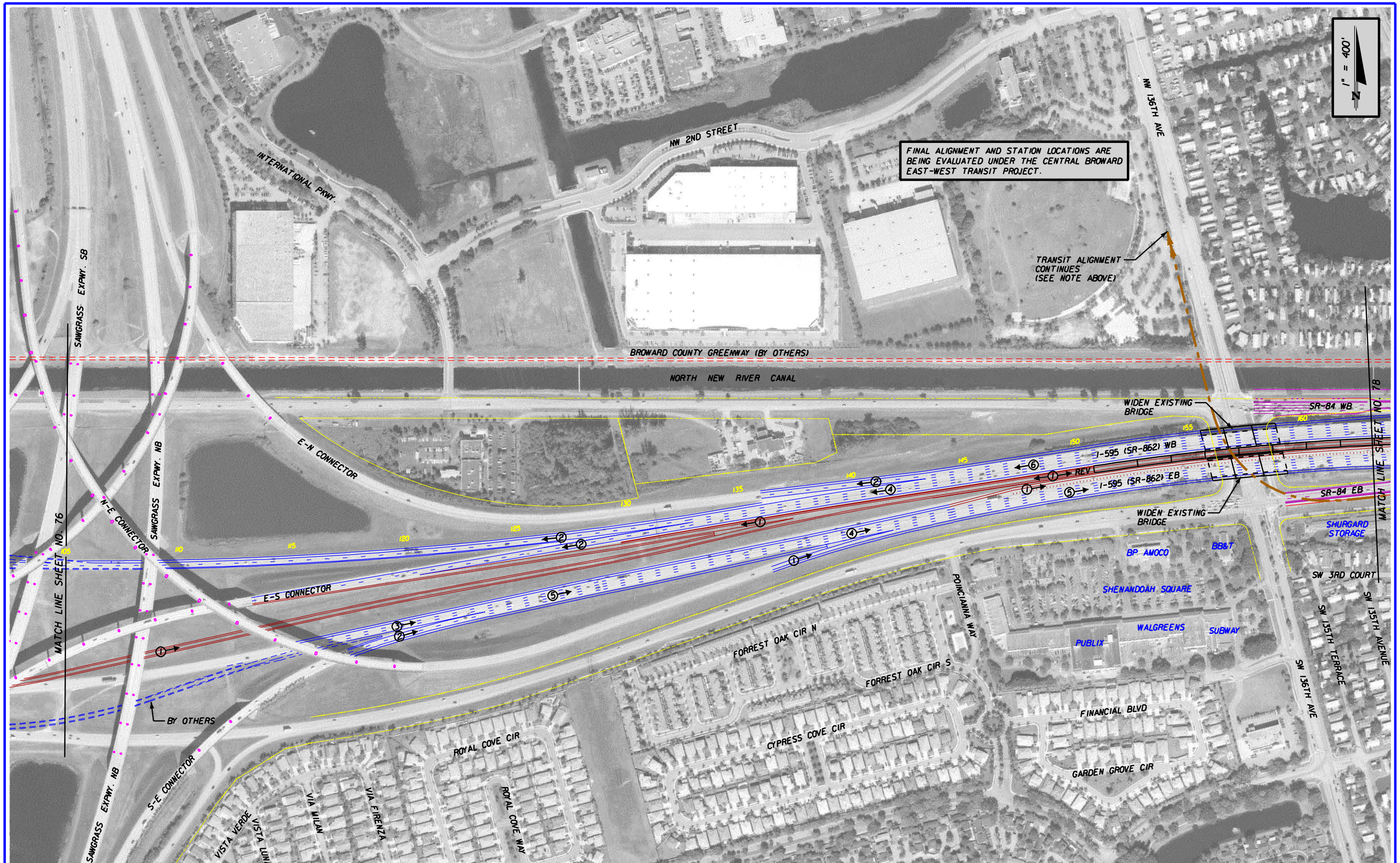

REVISIONS					
DATE	BY	DESCRIPTION	DATE	BY	DESCRIPTION

RS&H
Reynolds, Smith and Hills, Inc.
300 S. Pine Island Road, Suite 300
Plantation, Florida 33324-2619
954-474-3005
FL Cert. No. EB0005620
Phil Schwab, P.E. No. 47555

STATE OF FLORIDA
DEPARTMENT OF TRANSPORTATION

ROAD NO.	COUNTY	FINANCIAL PROJECT ID
862	BROWARD	409354-1-22-01

I-595 PD&E STUDY
ALTERNATIVE 2A PLAN

SHEET NO.
77

REVISIONS					
DATE	BY	DESCRIPTION	DATE	BY	DESCRIPTION

RS&H
Reynolds, Smith and Hills, Inc.
300 S. Pine Island Road, Suite 300
Plantation, Florida 33324-2619
954-474-3005
FL Cert. No. EB0005620
Phil Schwab, P.E. No. 47555

STATE OF FLORIDA
DEPARTMENT OF TRANSPORTATION

ROAD NO.	COUNTY	FINANCIAL PROJECT ID
862	BROWARD	409354-1-22-01

I-595 PD&E STUDY
ALTERNATIVE 2A PLAN

SHEET NO.
78

$USER$ 2/11/2006 2:05:06 PM X:\projects\ill4553000\roadway\PE Report\plan2A03.dgn

REVISIONS					
DATE	BY	DESCRIPTION	DATE	BY	DESCRIPTION

RS&H
Reynolds, Smith and Hills, Inc.
300 S. Pine Island Road, Suite 300
Plantation, Florida 33324-2619
954-474-3005
FL Cert. No. EB0005620
Phil Schwab, P.E. No. 47555

STATE OF FLORIDA
DEPARTMENT OF TRANSPORTATION

ROAD NO.	COUNTY	FINANCIAL PROJECT ID
862	BROWARD	409354-1-22-01

I-595 PD&E STUDY
ALTERNATIVE 2A PLAN

SHEET NO. 79

REVISIONS					
DATE	BY	DESCRIPTION	DATE	BY	DESCRIPTION

RS&H
Reynolds, Smith and Hills, Inc.
300 S. Pine Island Road, Suite 300
Plantation, Florida 33324-2619
954-474-3005
FL Cert. No. EB0005620
Phil Schwab, P.E. No. 47555

STATE OF FLORIDA
DEPARTMENT OF TRANSPORTATION

ROAD NO.	COUNTY	FINANCIAL PROJECT ID
862	BROWARD	409354-1-22-01

I-595 PD&E STUDY
ALTERNATIVE 2A PLAN

SHEET NO.
80

$USER$ 2/15/2006 7:54:00 AM x:\projects\11455300\roadway\PE Reports\plan2A06.dgn

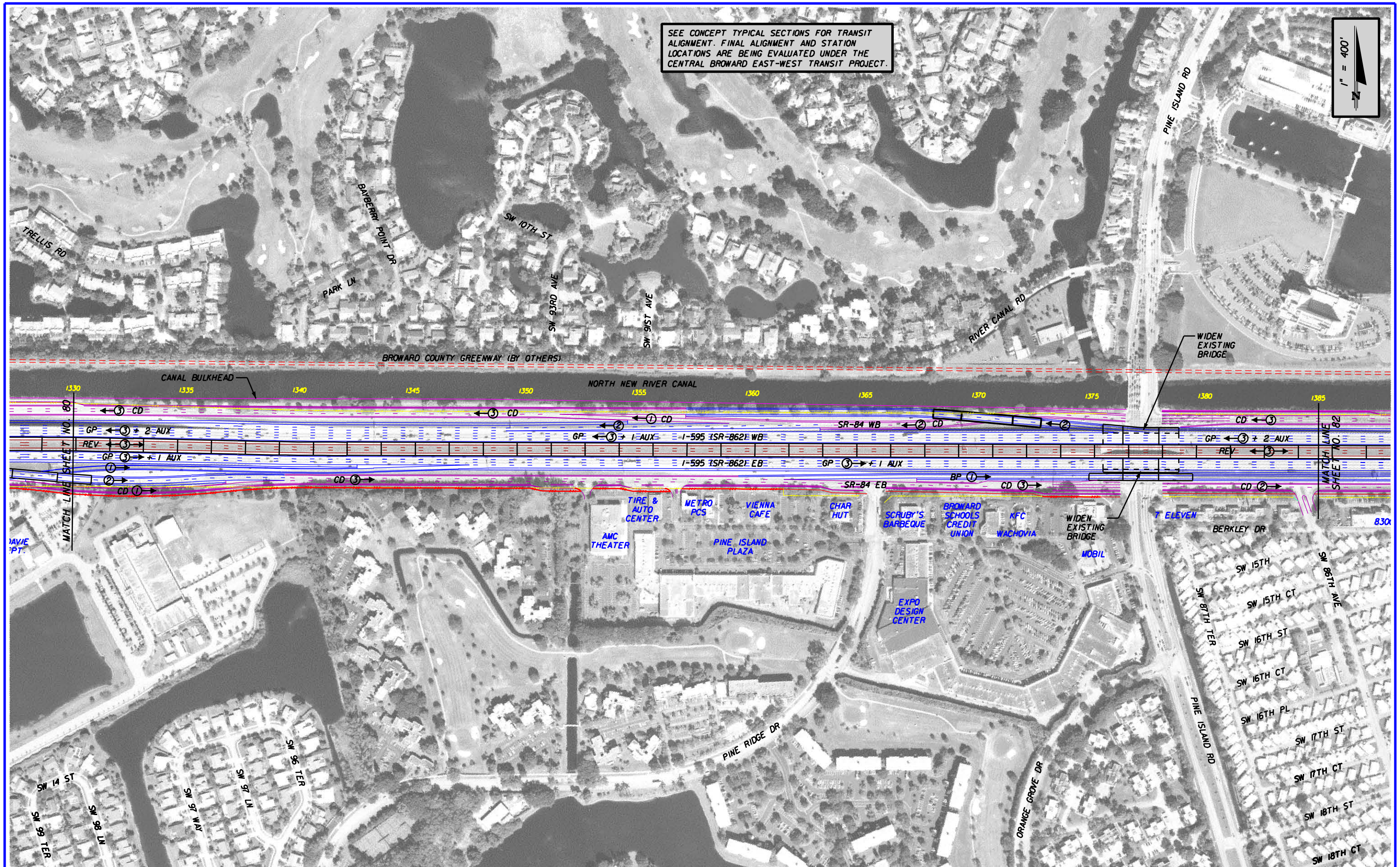

REVISIONS					
DATE	BY	DESCRIPTION	DATE	BY	DESCRIPTION

RS&H
Reynolds, Smith and Hills, Inc.
300 S. Pine Island Road, Suite 300
Plantation, Florida 33324-2619
954-474-3005
FL Cert. No. EB0005620
Phil Schwab, P.E. No. 47555

STATE OF FLORIDA
DEPARTMENT OF TRANSPORTATION

ROAD NO.	COUNTY	FINANCIAL PROJECT ID
862	BROWARD	409354-1-22-01

I-595 PD&E STUDY
ALTERNATIVE 2A PLAN

SHEET NO.
81

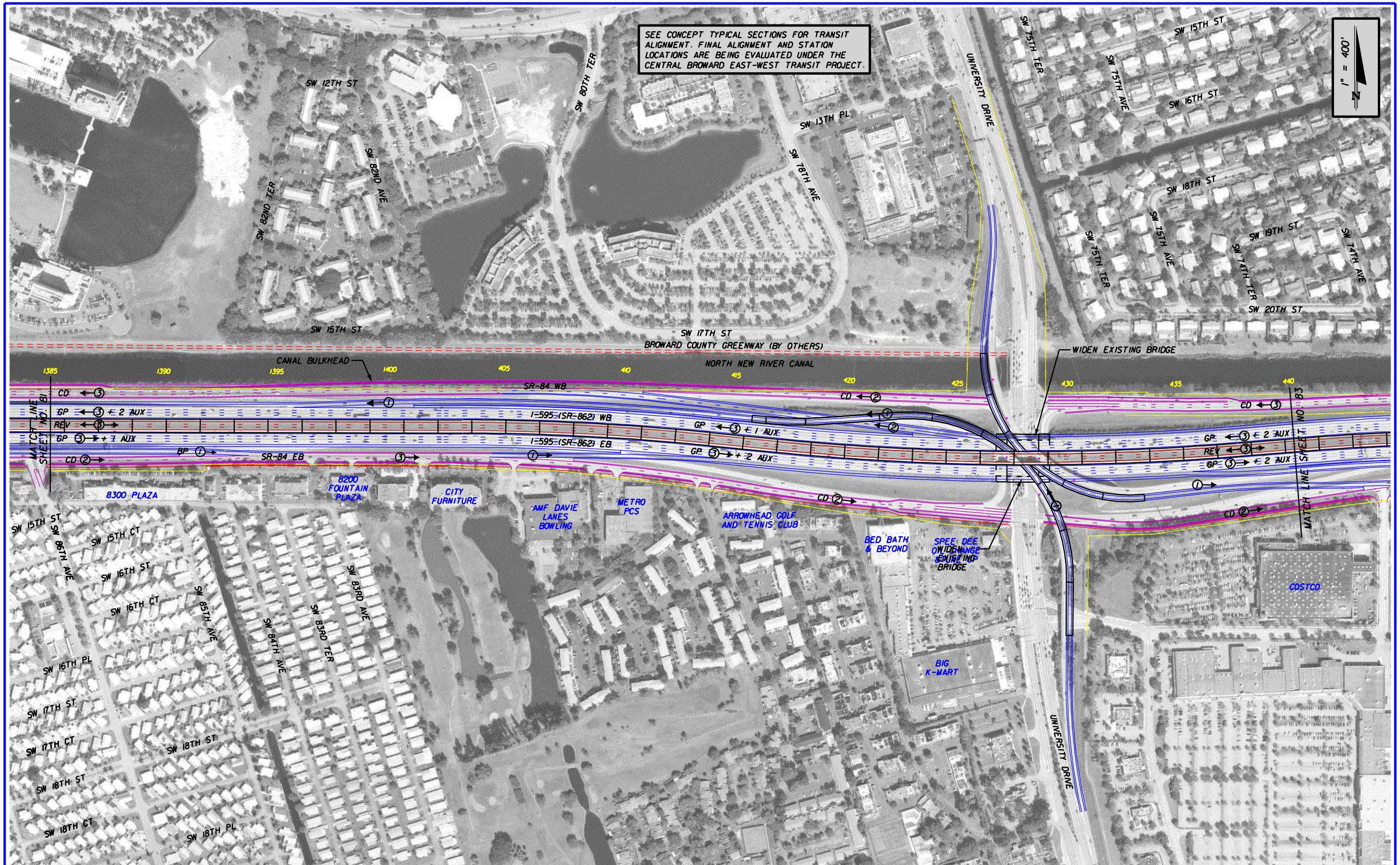

REVISIONS					
DATE	BY	DESCRIPTION	DATE	BY	DESCRIPTION

RS&H
Reynolds, Smith and Hills, Inc.
300 S. Pine Island Road, Suite 300
Plantation, Florida 33324-2619
954-474-3005
FL Cert. No. EB0005620
Phil Schwab, P.E. No. 47555

STATE OF FLORIDA
DEPARTMENT OF TRANSPORTATION

ROAD NO.	COUNTY	FINANCIAL PROJECT ID
862	BROWARD	409354-1-22-01

I-595 PD&E STUDY
ALTERNATIVE 2A PLAN

SHEET NO.
82

$USER$ 2/15/2006 7:54:54 AM x:\projects\11145530\roadway\PE Report\plan2A01.dgn

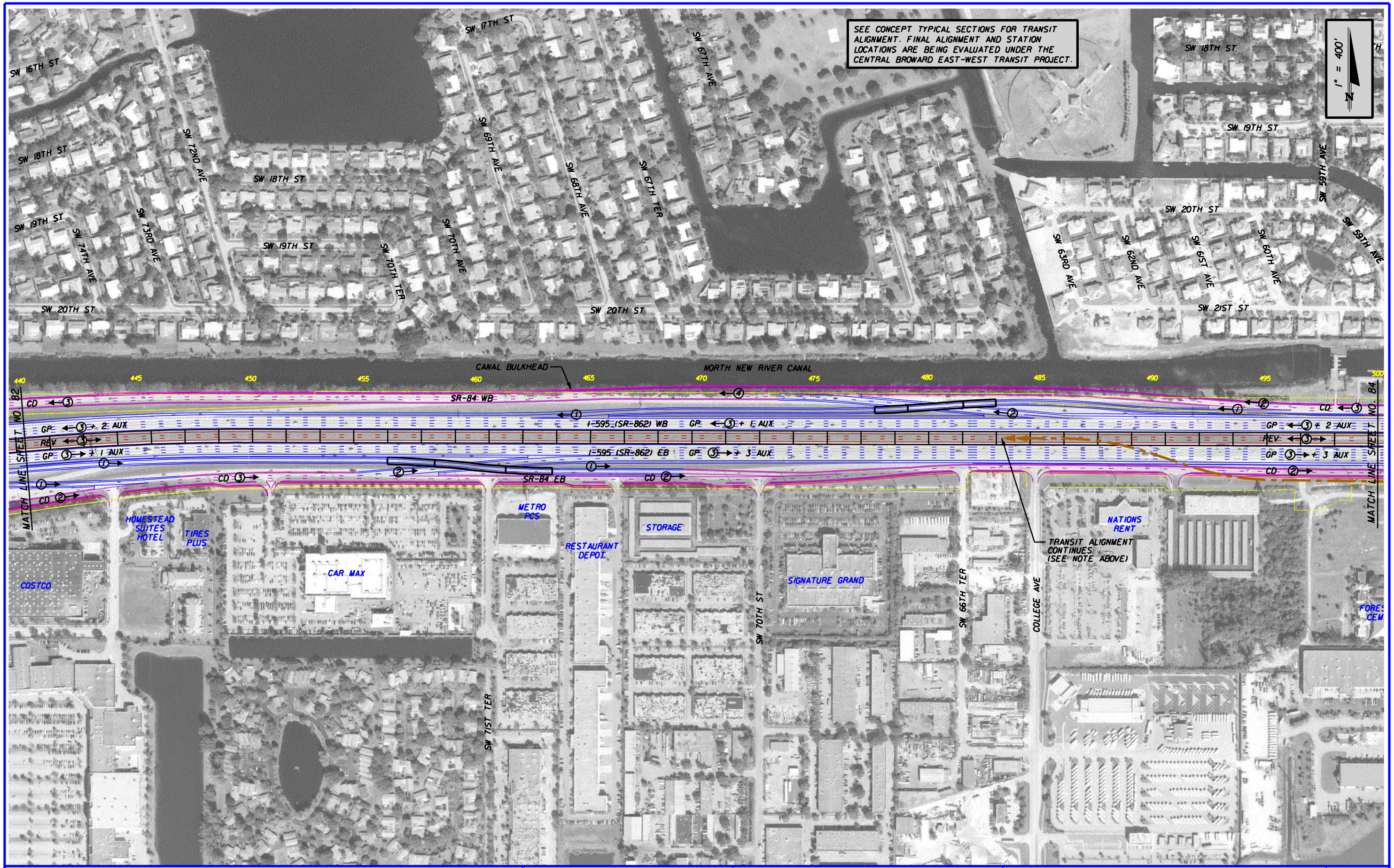

REVISIONS					
DATE	BY	DESCRIPTION	DATE	BY	DESCRIPTION

RS&H
Reynolds, Smith and Hills, Inc.
300 S. Pine Island Road, Suite 300
Plantation, Florida 33324-2619
954-474-3005
FL Cert. No. EB0005620
Phil Schwab, P.E. No. 47555

STATE OF FLORIDA
DEPARTMENT OF TRANSPORTATION

ROAD NO.	COUNTY	FINANCIAL PROJECT ID
862	BROWARD	409354-1-22-01

I-595 PD&E STUDY
ALTERNATIVE 2A PLAN

SHEET NO.
83

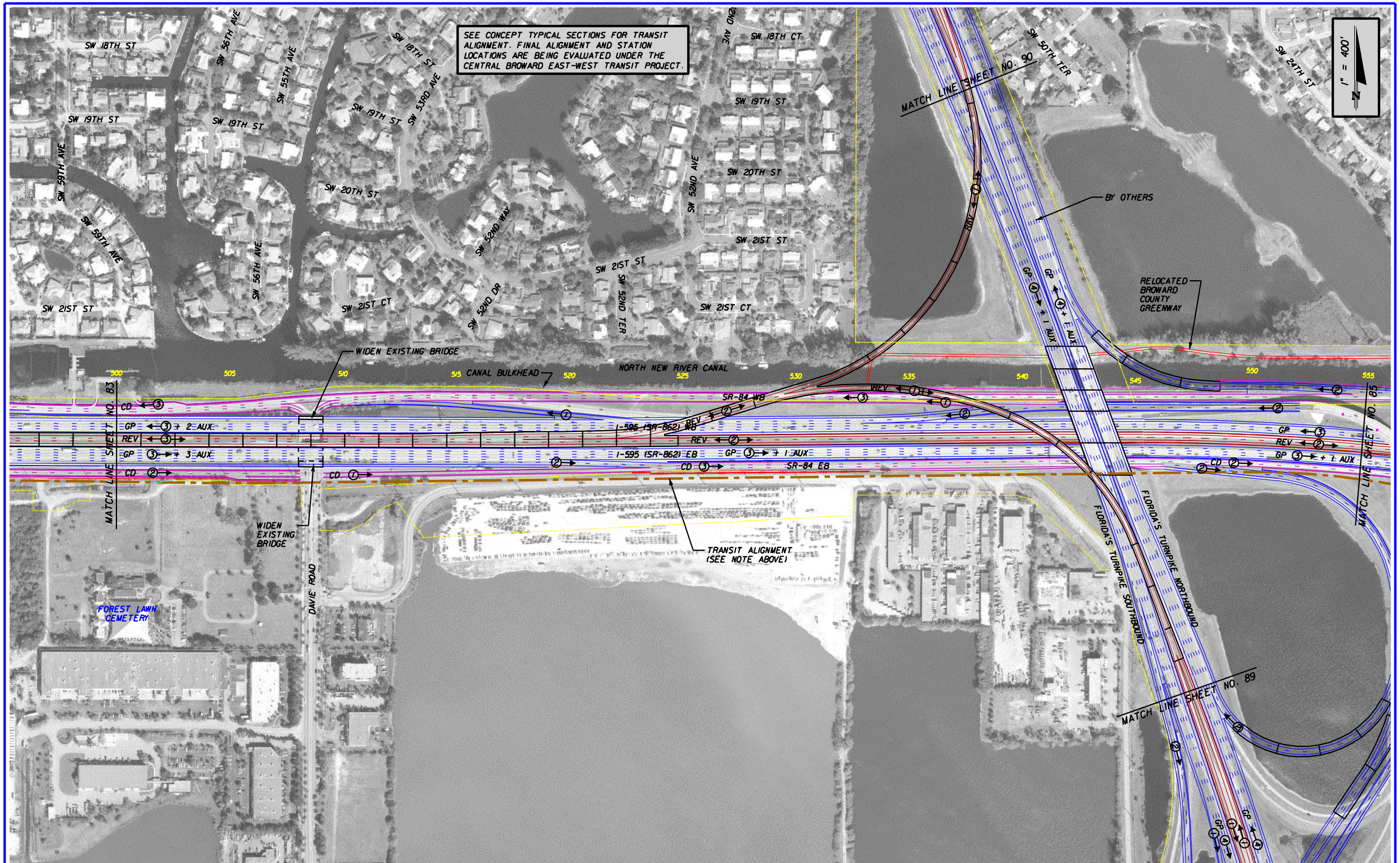

REVISIONS					
DATE	BY	DESCRIPTION	DATE	BY	DESCRIPTION

RS&H
Reynolds, Smith and Hills, Inc.
300 S. Pine Island Road, Suite 300
Plantation, Florida 33324-2619
954-474-3005
FL Cert. No. EB0005620
Phil Schwab, P.E. No. 47555

STATE OF FLORIDA
DEPARTMENT OF TRANSPORTATION

ROAD NO.	COUNTY	FINANCIAL PROJECT ID
862	BROWARD	409354-1-22-01

I-595 PD&E STUDY
ALTERNATIVE 2A PLAN

SHEET NO. 84

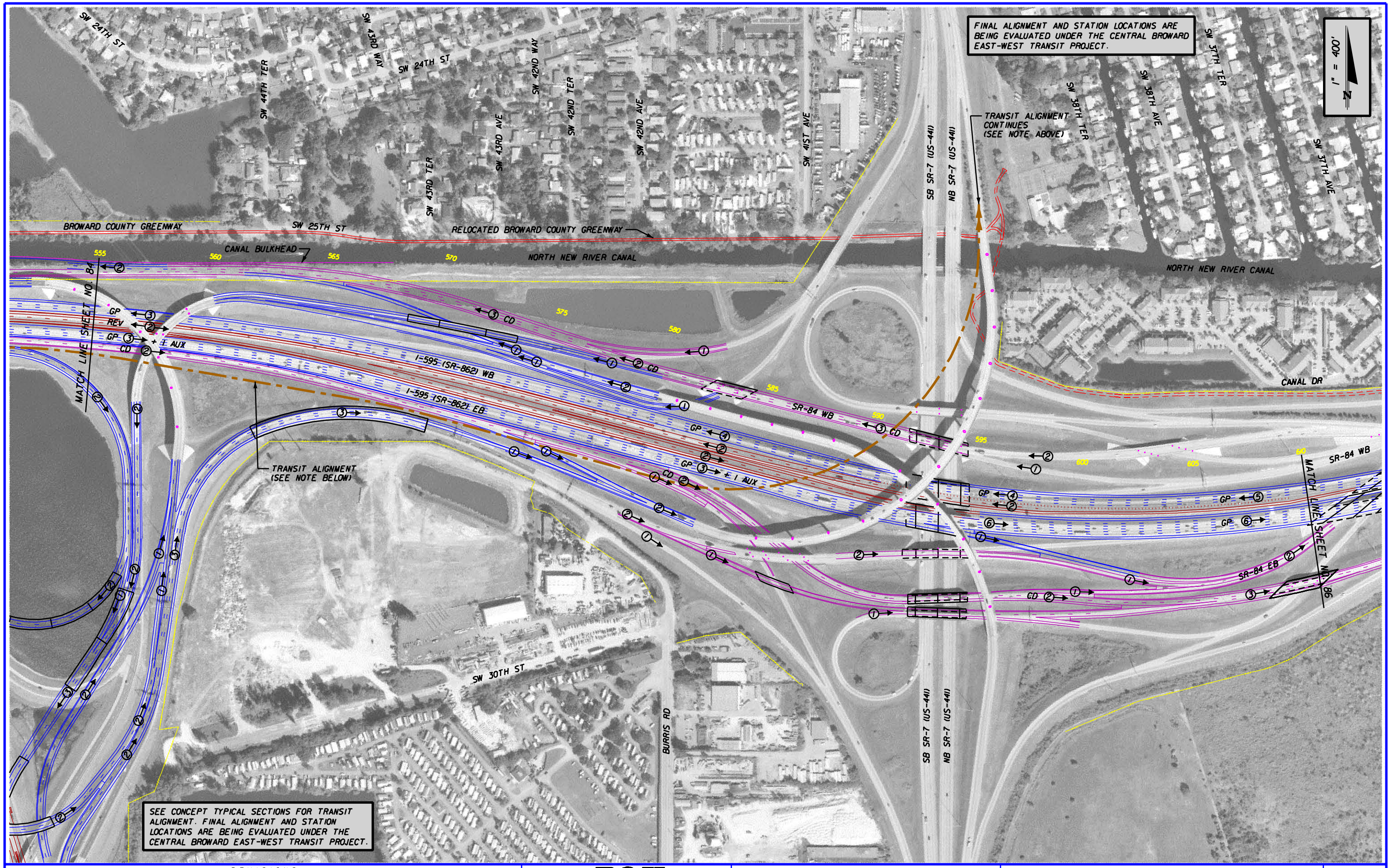

REVISIONS					
DATE	BY	DESCRIPTION	DATE	BY	DESCRIPTION

RS&H
Reynolds, Smith and Hills, Inc.
300 S. Pine Island Road, Suite 300
Plantation, Florida 33324-2619
954-474-3005
FL Cert. No. EB0005620
Phil Schwab, P.E. No. 47555

STATE OF FLORIDA
DEPARTMENT OF TRANSPORTATION

ROAD NO.	COUNTY	FINANCIAL PROJECT ID
862	BROWARD	409354-1-22-01

I-595 PD&E STUDY
ALTERNATIVE 2A PLAN

SHEET NO. 85

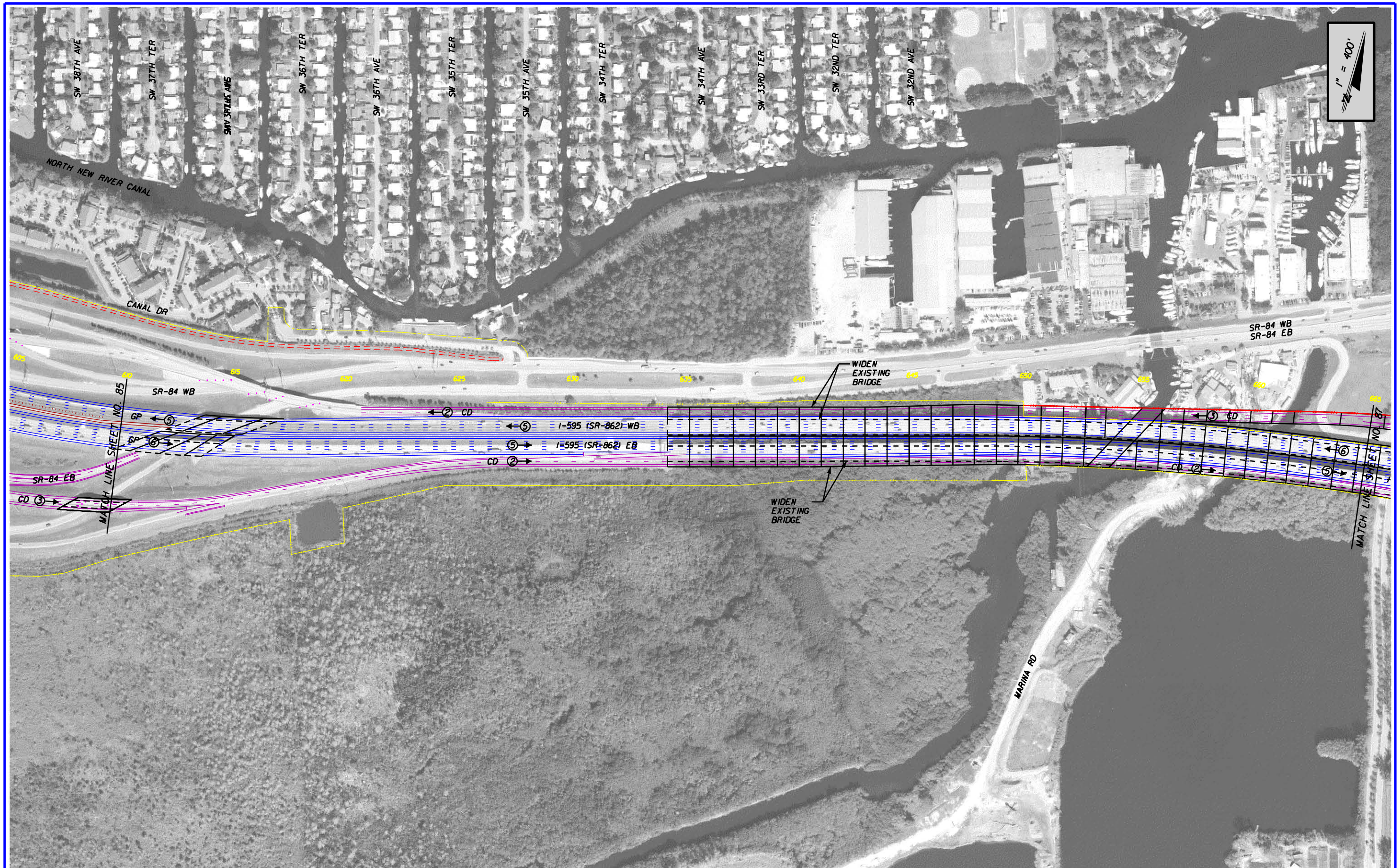

REVISIONS					
DATE	BY	DESCRIPTION	DATE	BY	DESCRIPTION

RS&H
Reynolds, Smith and Hills, Inc.
300 S. Pine Island Road, Suite 300
Plantation, Florida 33324-2619
954-474-3005
FL Cert. No. EB0005620
Phil Schwab, P.E. No. 47555

STATE OF FLORIDA
DEPARTMENT OF TRANSPORTATION

ROAD NO.	COUNTY	FINANCIAL PROJECT ID
862	BROWARD	409354-1-22-01

I-595 PD&E STUDY
ALTERNATIVE 2A PLAN

SHEET NO.
86

@USER@ 2/15/2006 7:55:21 AM x:\projects\IM453606\roadway\PE Report\plan2AH.dgn

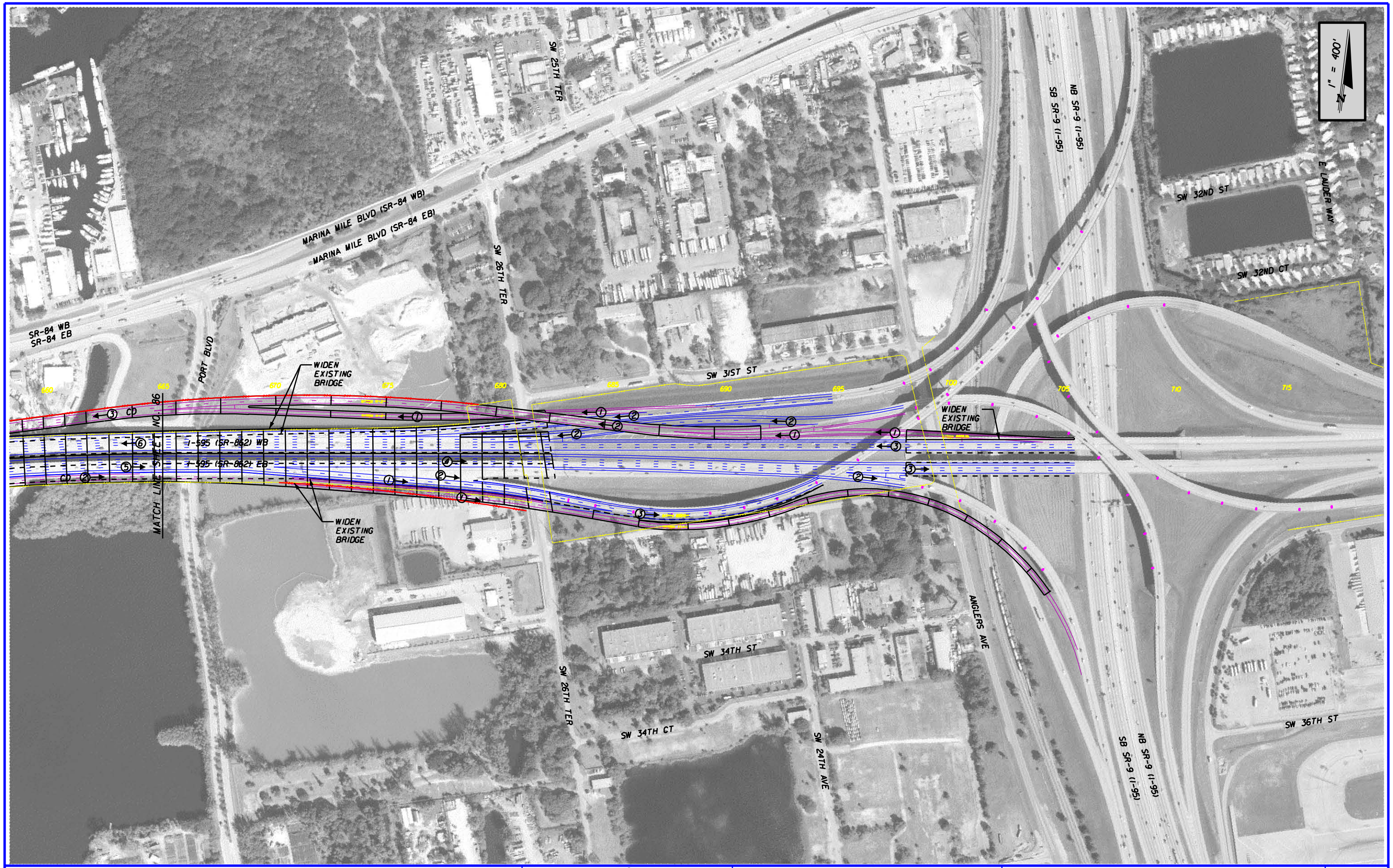

REVISIONS					
DATE	BY	DESCRIPTION	DATE	BY	DESCRIPTION

RS&H
Reynolds, Smith and Hills, Inc.
300 S. Pine Island Road, Suite 300
Plantation, Florida 33324-2619
954-474-3005
FL Cert. No. EB0005620
Phil Schwab, P.E. No. 47555

STATE OF FLORIDA
DEPARTMENT OF TRANSPORTATION

ROAD NO.	COUNTY	FINANCIAL PROJECT ID
862	BROWARD	409354-1-22-01

I-595 PD&E STUDY
ALTERNATIVE 2A PLAN

SHEET NO.
87

REVISIONS					
DATE	BY	DESCRIPTION	DATE	BY	DESCRIPTION

RS&H
Reynolds, Smith and Hills, Inc.
300 S. Pine Island Road, Suite 300
Plantation, Florida 33324-2619
954-474-3005
FL Cert. No. EB0005620
Phil Schwab, P.E. No. 47555

STATE OF FLORIDA
DEPARTMENT OF TRANSPORTATION

ROAD NO.	COUNTY	FINANCIAL PROJECT ID
862	BROWARD	409354-1-22-01

I-595 PD&E STUDY
ALTERNATIVE 2A PLAN

SHEET NO.
88

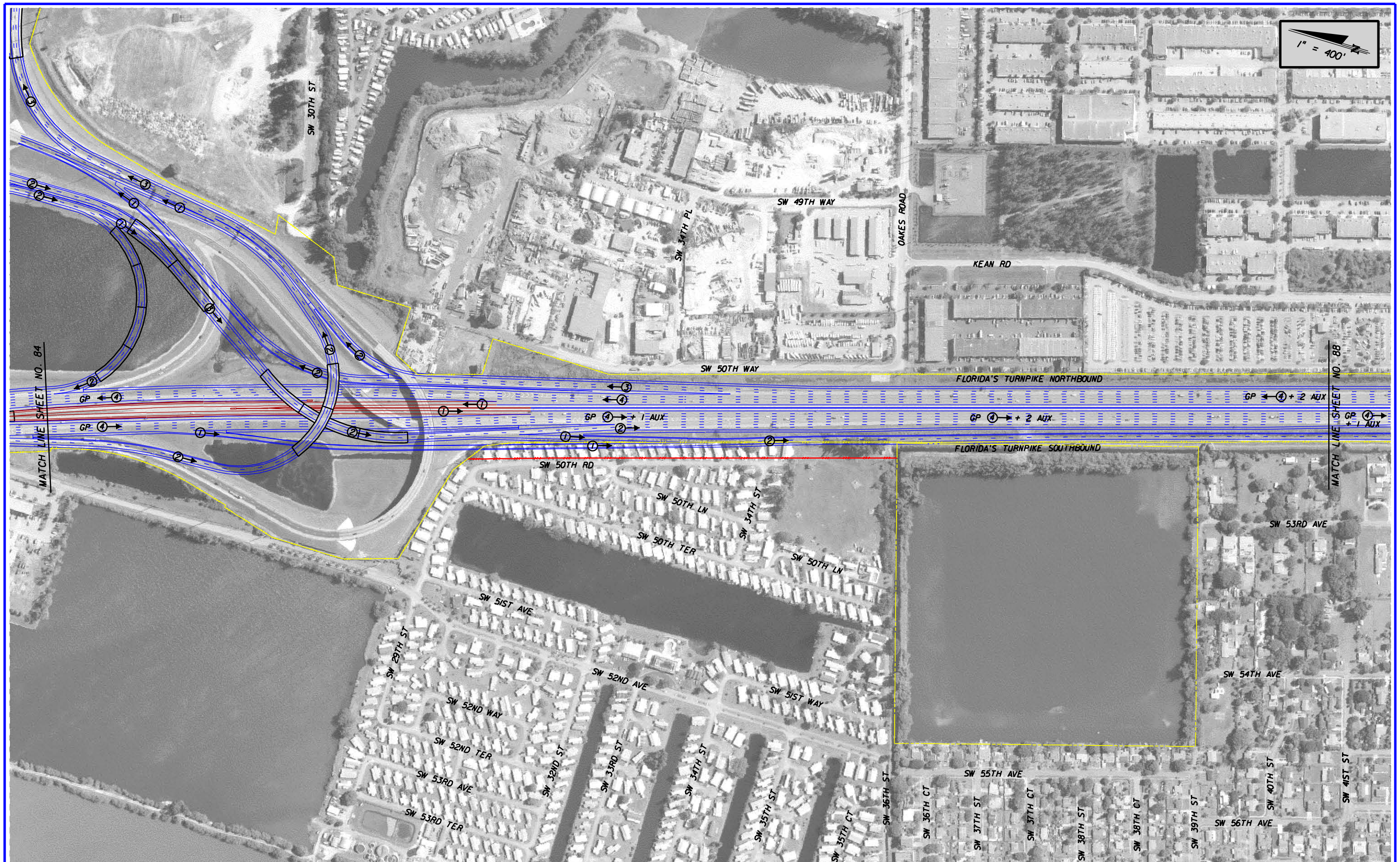

REVISIONS					
DATE	BY	DESCRIPTION	DATE	BY	DESCRIPTION

RS&H
Reynolds, Smith and Hills, Inc.
300 S. Pine Island Road, Suite 300
Plantation, Florida 33324-2619
954-474-3005
FL Cert. No. EB0005620
Phil Schwab, P.E. No. 47555

STATE OF FLORIDA
DEPARTMENT OF TRANSPORTATION

ROAD NO.	COUNTY	FINANCIAL PROJECT ID
862	BROWARD	409354-1-22-01

I-595 PD&E STUDY
ALTERNATIVE 2A PLAN

SHEET NO.
89

$USER$ 2/15/2006 7:56:20 AM x:\projects\11455300\roadway\PE Report\plan2A14.dgn

REVISIONS					
DATE	BY	DESCRIPTION	DATE	BY	DESCRIPTION

RS&H
Reynolds, Smith and Hills, Inc.
300 S. Pine Island Road, Suite 300
Plantation, Florida 33324-2619
954-474-3005
FL Cert. No. EB0005620
Phil Schwab, P.E. No. 47555

STATE OF FLORIDA
DEPARTMENT OF TRANSPORTATION

ROAD NO.	COUNTY	FINANCIAL PROJECT ID
862	BROWARD	409354-1-22-01

I-595 PD&E STUDY
ALTERNATIVE 2A PLAN

SHEET NO.
90

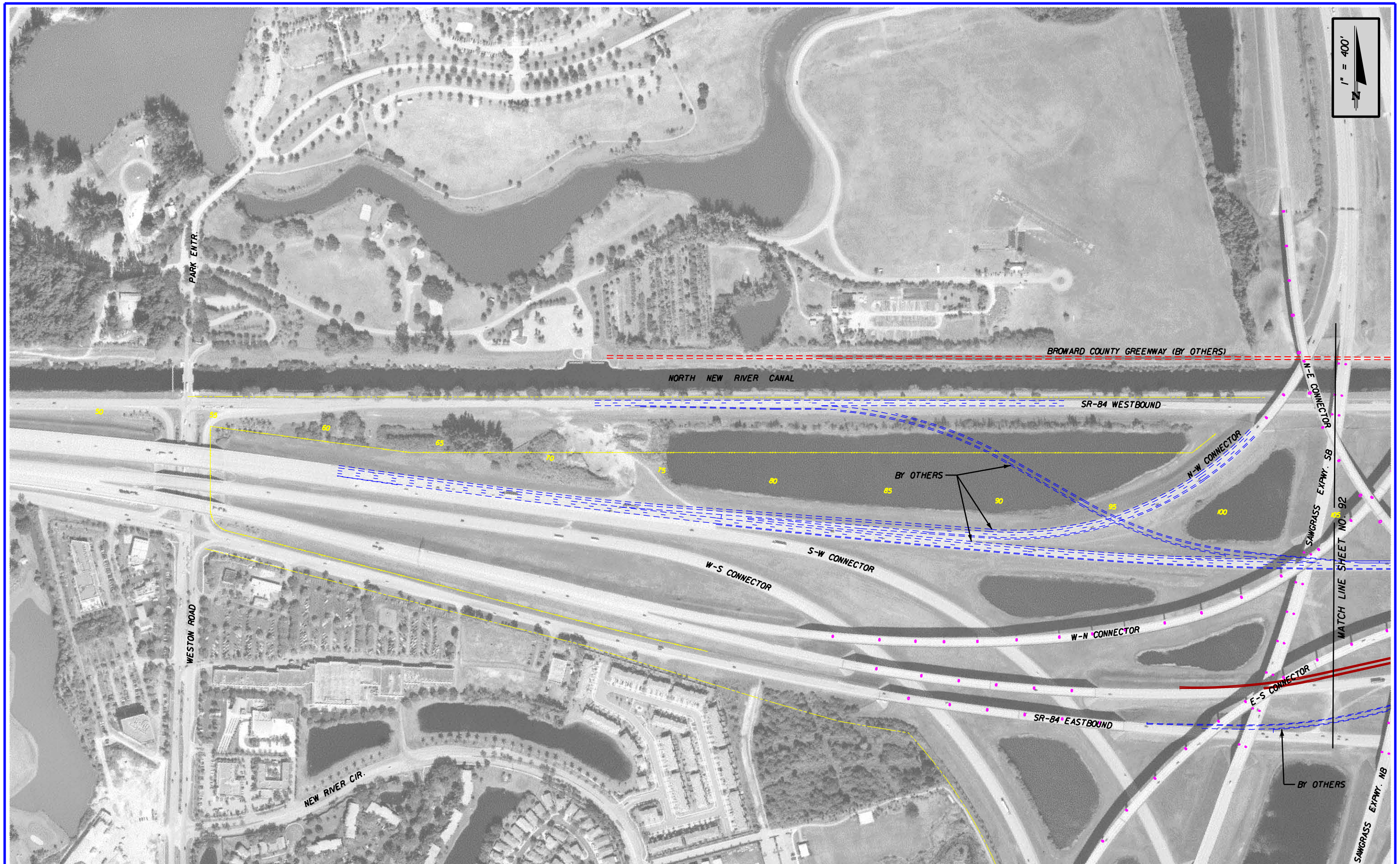

REVISIONS					
DATE	BY	DESCRIPTION	DATE	BY	DESCRIPTION

RS&H
Reynolds, Smith and Hills, Inc.
300 S. Pine Island Road, Suite 300
Plantation, Florida 33324-2619
954-474-3005
FL Cert. No. EB0005620
Phil Schwab, P.E. No. 47555

STATE OF FLORIDA
DEPARTMENT OF TRANSPORTATION

ROAD NO.	COUNTY	FINANCIAL PROJECT ID
862	BROWARD	409354-1-22-01

I-595 PD&E STUDY
ALTERNATIVE 2B PLAN

SHEET NO.
91

$USER$ 2/15/2006 7:56:57 AM X:\projects\11455300\roadway\PE Report\plan2B01.dgn

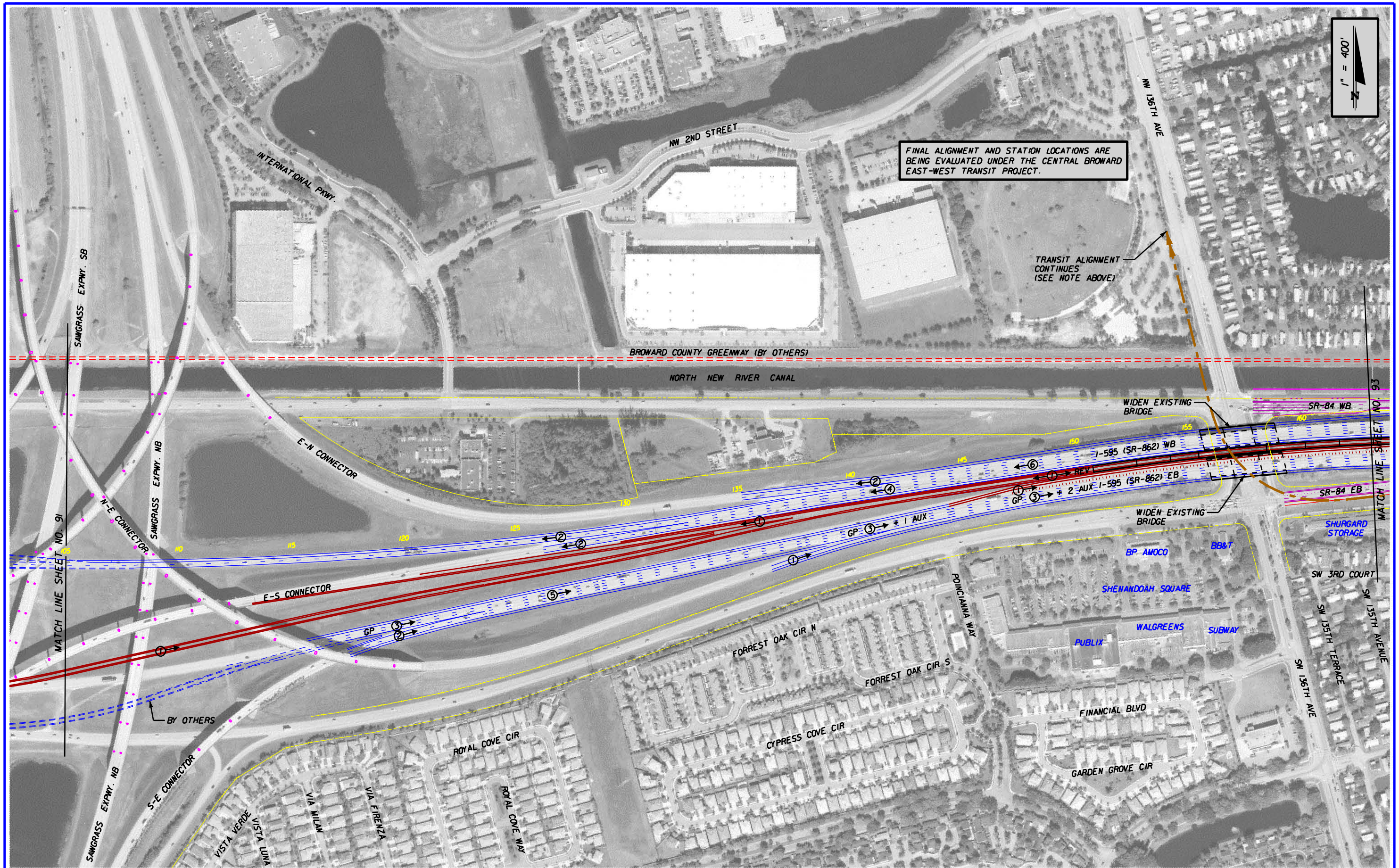

REVISIONS					
DATE	BY	DESCRIPTION	DATE	BY	DESCRIPTION

RS&H
Reynolds, Smith and Hills, Inc.
300 S. Pine Island Road, Suite 300
Plantation, Florida 33324-2619
954-474-3005
FL Cert. No. EB0005620
Phil Schwab, P.E. No. 47555

STATE OF FLORIDA
DEPARTMENT OF TRANSPORTATION

ROAD NO.	COUNTY	FINANCIAL PROJECT ID
862	BROWARD	409354-1-22-01

I-595 PD&E STUDY
ALTERNATIVE 2B PLAN

SHEET NO. 92

REVISIONS					
DATE	BY	DESCRIPTION	DATE	BY	DESCRIPTION

RS&H
Reynolds, Smith and Hills, Inc.
300 S. Pine Island Road, Suite 300
Plantation, Florida 33324-2619
954-474-3005
FL Cert. No. EB00005620
Phil Schwab, P.E. No. 47555

STATE OF FLORIDA
DEPARTMENT OF TRANSPORTATION

ROAD NO.	COUNTY	FINANCIAL PROJECT ID
862	BROWARD	409354-1-22-01

I-595 PD&E STUDY
ALTERNATIVE 2B PLAN

SHEET NO.
93

REVISIONS					
DATE	BY	DESCRIPTION	DATE	BY	DESCRIPTION

RS&H
Reynolds, Smith and Hills, Inc.
300 S. Pine Island Road, Suite 300
Plantation, Florida 33324-2619
954-474-3005
FL Cert. No. EB0005620
Phil Schwab, P.E. No. 47555

STATE OF FLORIDA
DEPARTMENT OF TRANSPORTATION

ROAD NO.	COUNTY	FINANCIAL PROJECT ID
862	BROWARD	409354-1-22-01

I-595 PD&E STUDY
ALTERNATIVE 2B PLAN

SHEET NO.
94

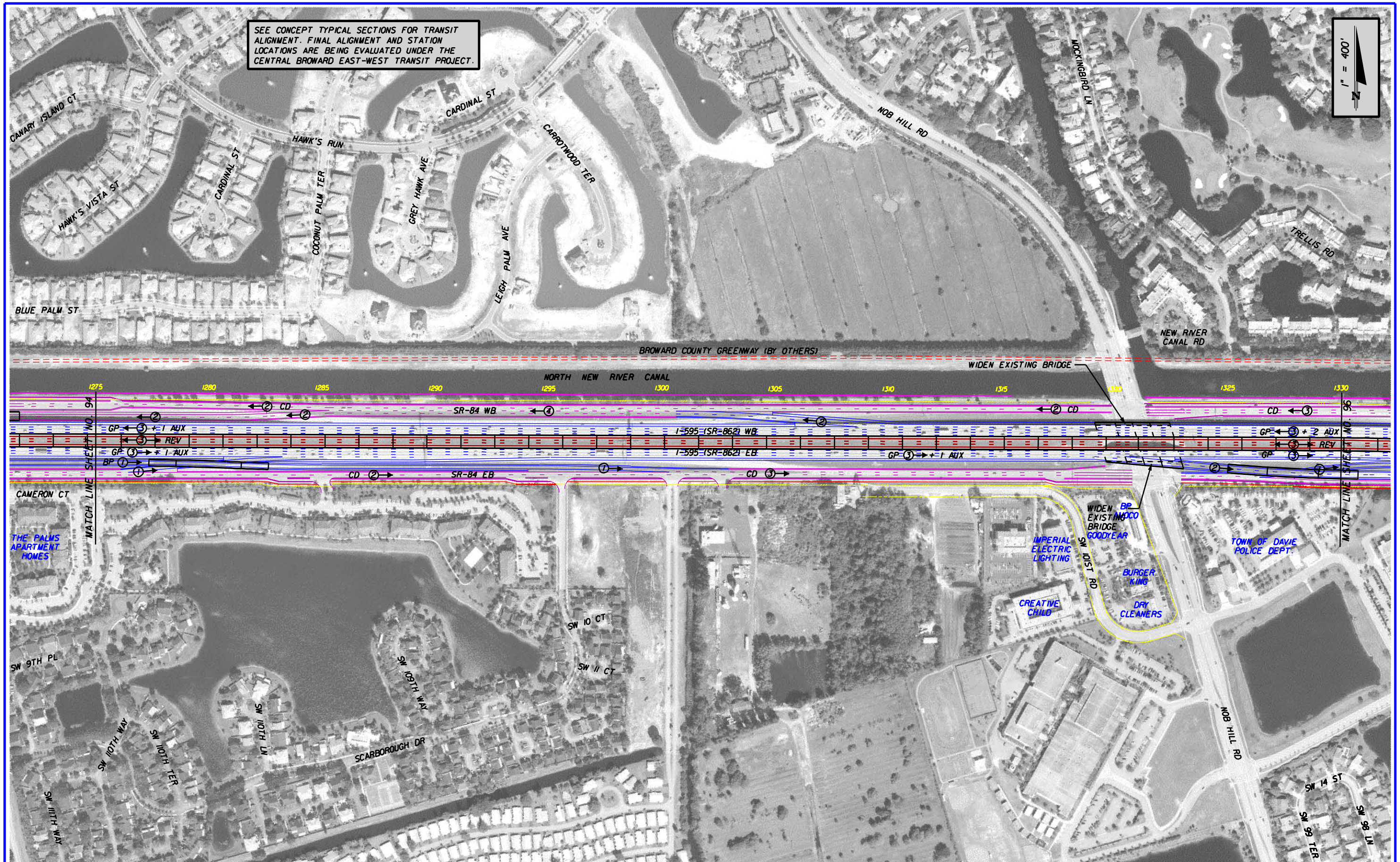

REVISIONS					
DATE	BY	DESCRIPTION	DATE	BY	DESCRIPTION

RS&H
Reynolds, Smith and Hills, Inc.
300 S. Pine Island Road, Suite 300
Plantation, Florida 33324-2619
954-474-3005
FL Cert. No. EB0005620
Phil Schwab, P.E. No. 47555

STATE OF FLORIDA
DEPARTMENT OF TRANSPORTATION

ROAD NO.	COUNTY	FINANCIAL PROJECT ID
862	BROWARD	409354-1-22-01

I-595 PD&E STUDY
ALTERNATIVE 2B PLAN

SHEET NO. 95

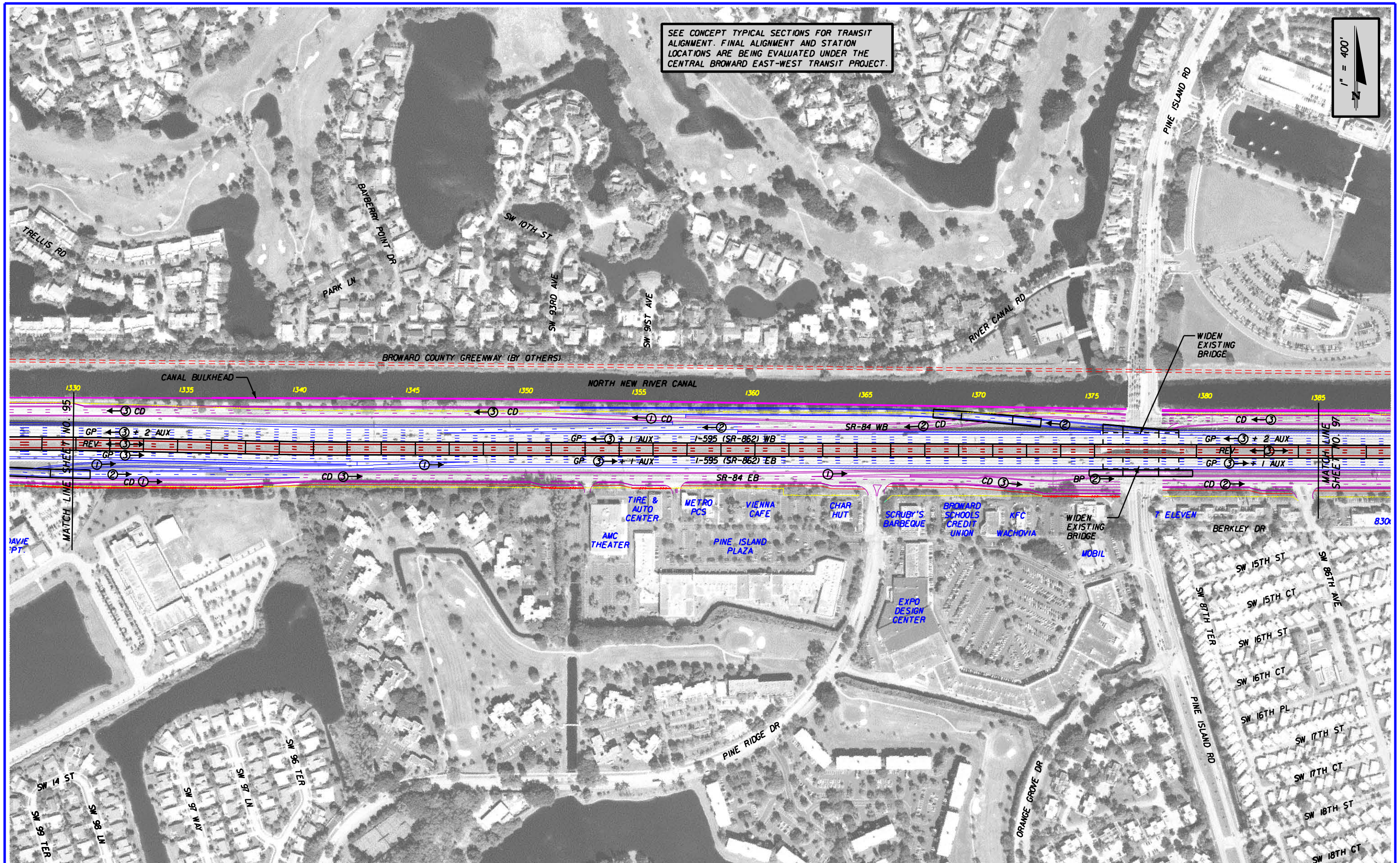

REVISIONS					
DATE	BY	DESCRIPTION	DATE	BY	DESCRIPTION

RS&H
Reynolds, Smith and Hills, Inc.
300 S. Pine Island Road, Suite 300
Plantation, Florida 33324-2619
954-474-3005
FL Cert. No. EB0005620
Phil Schwab, P.E. No. 47555

STATE OF FLORIDA
DEPARTMENT OF TRANSPORTATION

ROAD NO.	COUNTY	FINANCIAL PROJECT ID
862	BROWARD	409354-1-22-01

I-595 PD&E STUDY
ALTERNATIVE 2B PLAN

SHEET NO.
96

$USER$ 2/15/2006 7:58:25 AM x:\projects\III4553000\roadway\PE_Report\plan2B06.dgn

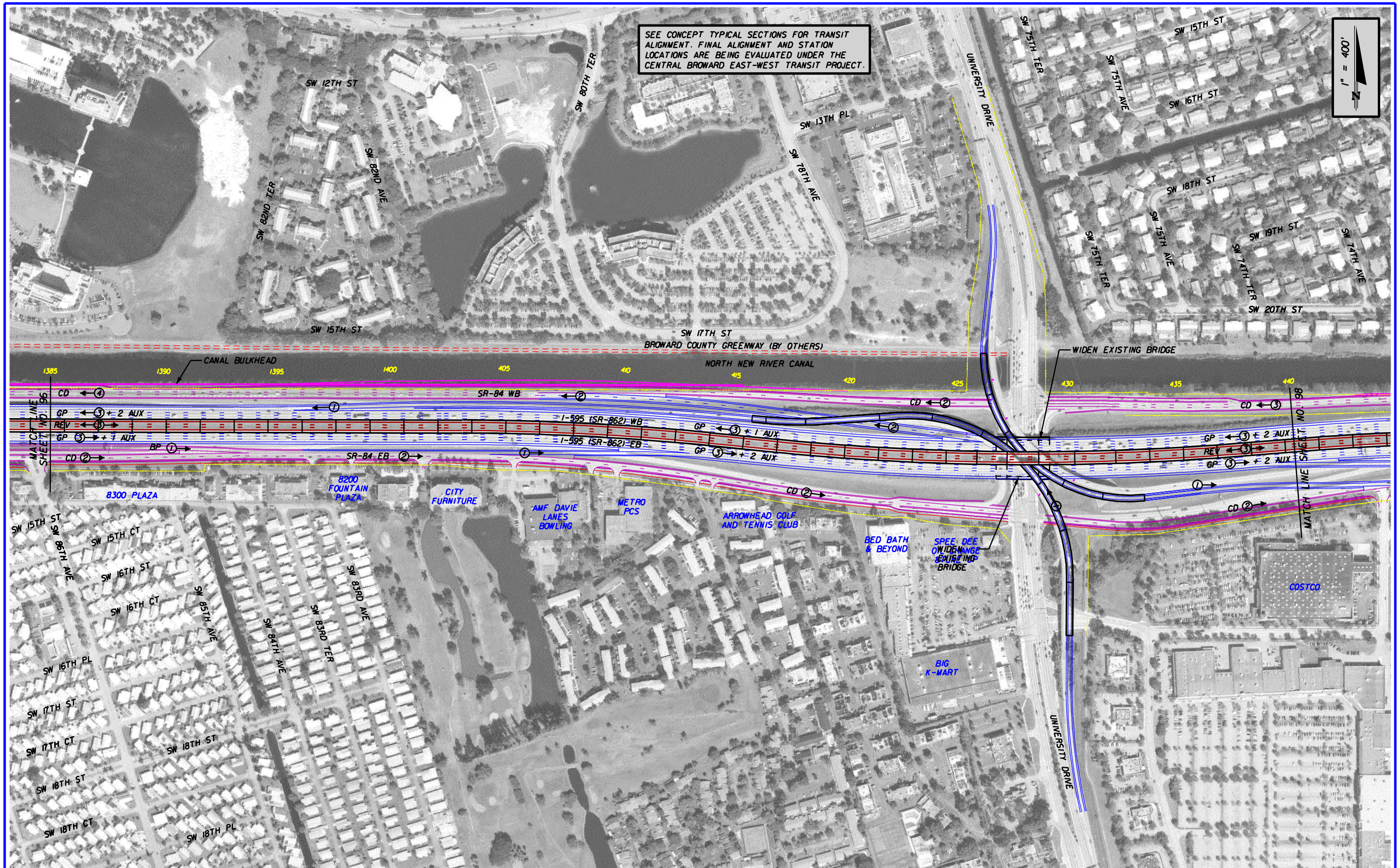

REVISIONS					
DATE	BY	DESCRIPTION	DATE	BY	DESCRIPTION

RS&H
Reynolds, Smith and Hills, Inc.
300 S. Pine Island Road, Suite 300
Plantation, Florida 33324-2619
954-474-3005
FL Cert. No. EB0005620
Phil Schwab, P.E. No. 47555

STATE OF FLORIDA
DEPARTMENT OF TRANSPORTATION

ROAD NO.	COUNTY	FINANCIAL PROJECT ID
862	BROWARD	409354-1-22-01

I-595 PD&E STUDY
ALTERNATIVE 2B PLAN

SHEET NO.
97

$USER$ 2/15/2006 7:58:44 AM x:\projects\11145530\roadway\PE Report\plan2B01.dgn

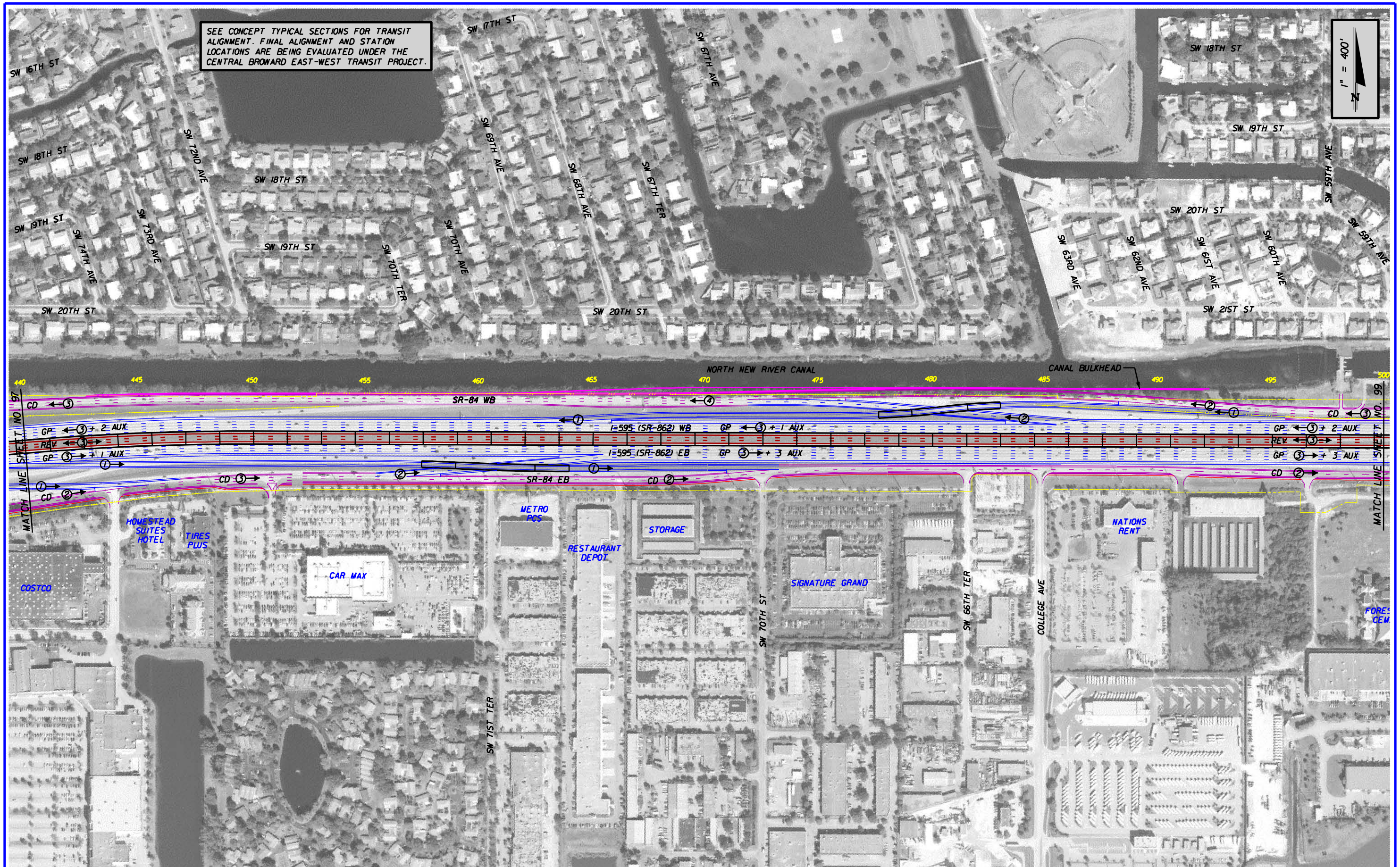

REVISIONS					
DATE	BY	DESCRIPTION	DATE	BY	DESCRIPTION

RS&H
Reynolds, Smith and Hills, Inc.
300 S. Pine Island Road, Suite 300
Plantation, Florida 33324-2619
954-474-3005
FL Cert. No. EB0005620
Phil Schwab, P.E. No. 47555

STATE OF FLORIDA
DEPARTMENT OF TRANSPORTATION

ROAD NO.	COUNTY	FINANCIAL PROJECT ID
862	BROWARD	409354-1-22-01

I-595 PD&E STUDY
ALTERNATIVE 2B PLAN

SHEET NO.
98

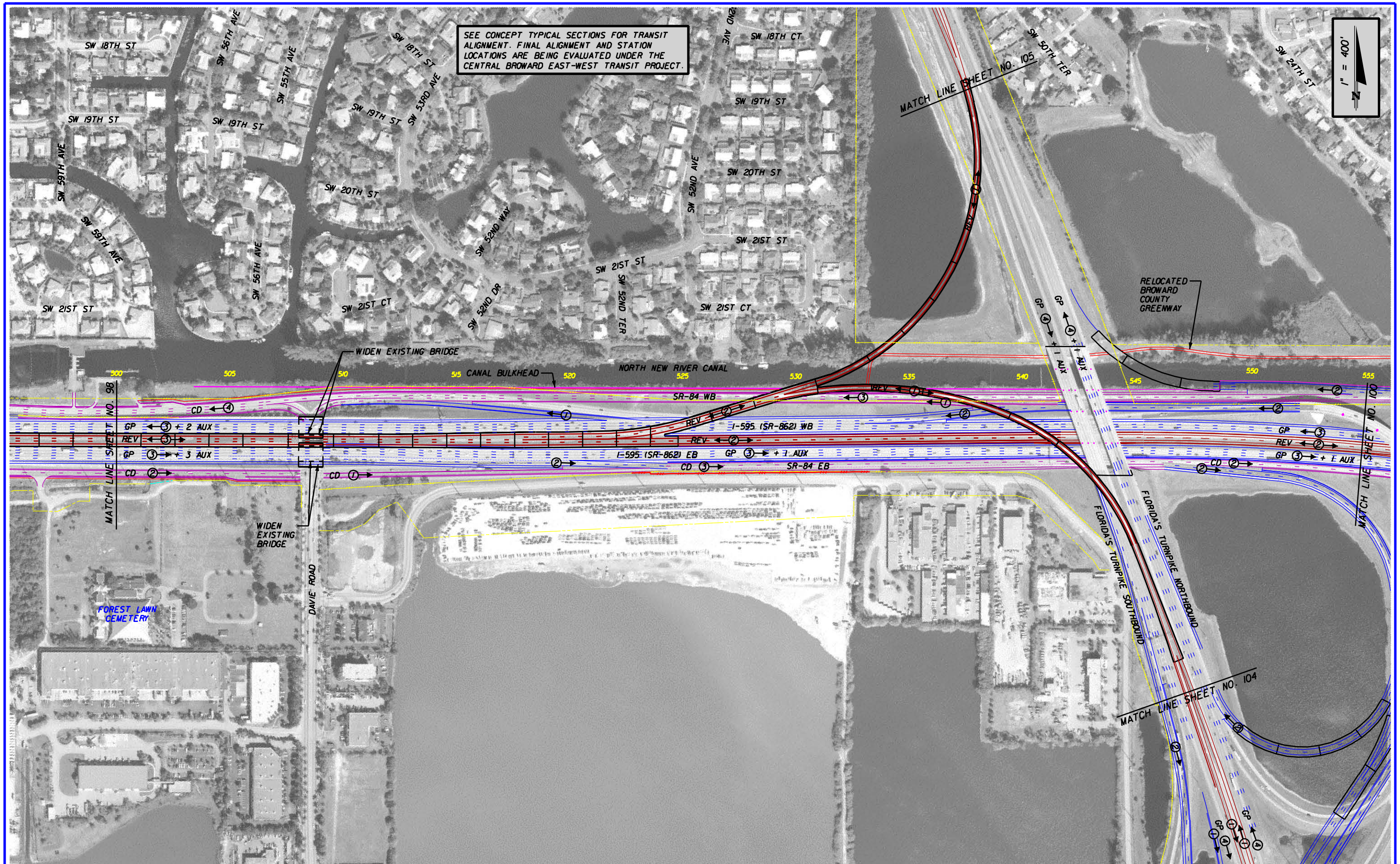

REVISIONS					
DATE	BY	DESCRIPTION	DATE	BY	DESCRIPTION

RS&H
Reynolds, Smith and Hills, Inc.
300 S. Pine Island Road, Suite 300
Plantation, Florida 33324-2619
954-474-3005
FL Cert. No. EB0005620
Phil Schwab, P.E. No. 47555

STATE OF FLORIDA
DEPARTMENT OF TRANSPORTATION

ROAD NO.	COUNTY	FINANCIAL PROJECT ID
862	BROWARD	409354-1-22-01

I-595 PD&E STUDY
ALTERNATIVE 2B PLAN

SHEET NO.
99

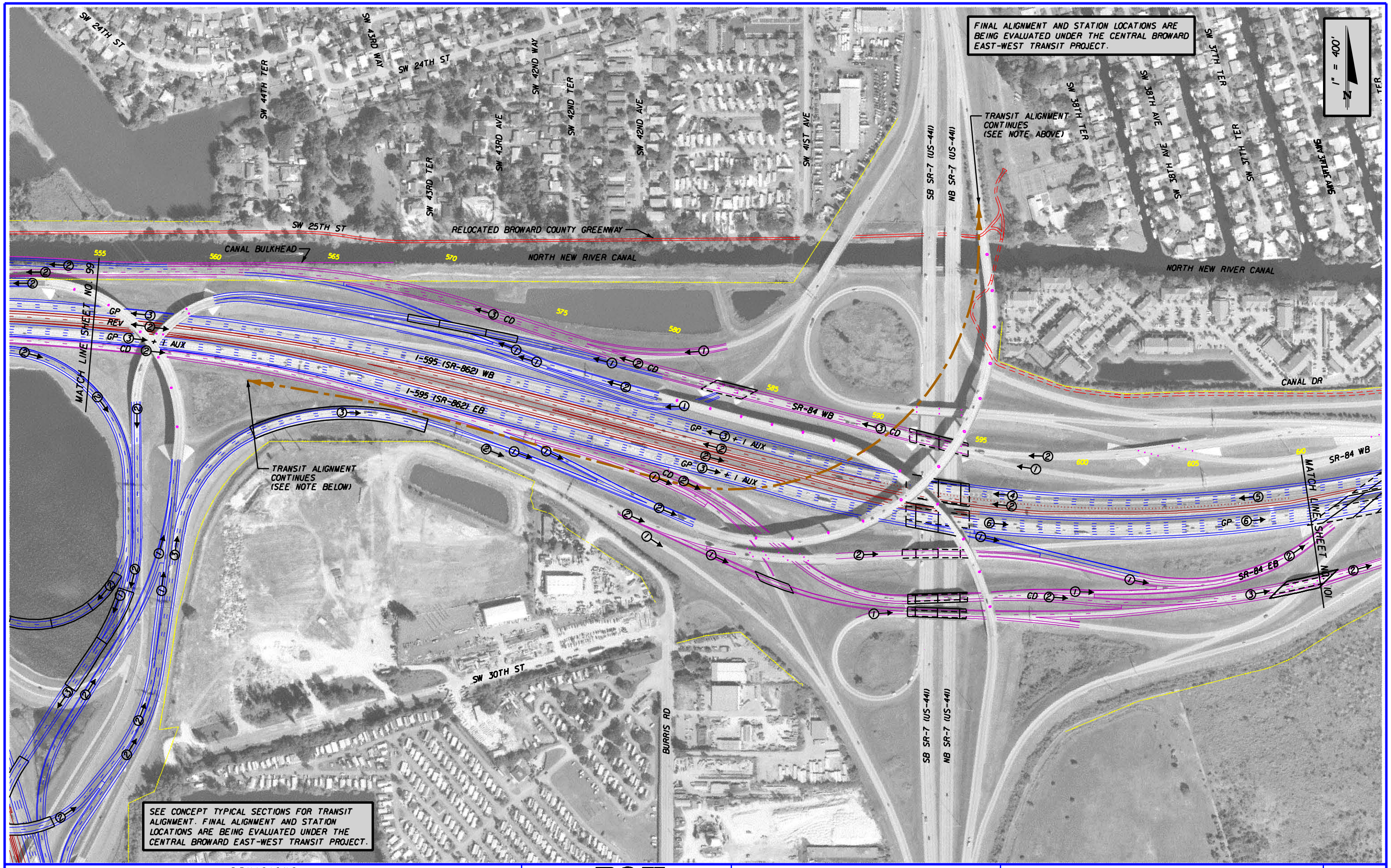

REVISIONS					
DATE	BY	DESCRIPTION	DATE	BY	DESCRIPTION

RS&H
Reynolds, Smith and Hills, Inc.
300 S. Pine Island Road, Suite 300
Plantation, Florida 33324-2619
954-474-3005
FL Cert. No. EB0005620
Phil Schwab, P.E. No. 47555

STATE OF FLORIDA
DEPARTMENT OF TRANSPORTATION

ROAD NO.	COUNTY	FINANCIAL PROJECT ID
862	BROWARD	409354-1-22-01

I-595 PD&E STUDY
ALTERNATIVE 2B PLAN

SHEET NO.
100

$USER$ 2/15/2006 7:59:38 AM x:\projects\II455300\roadway\PE Report\plan2B10.dgn

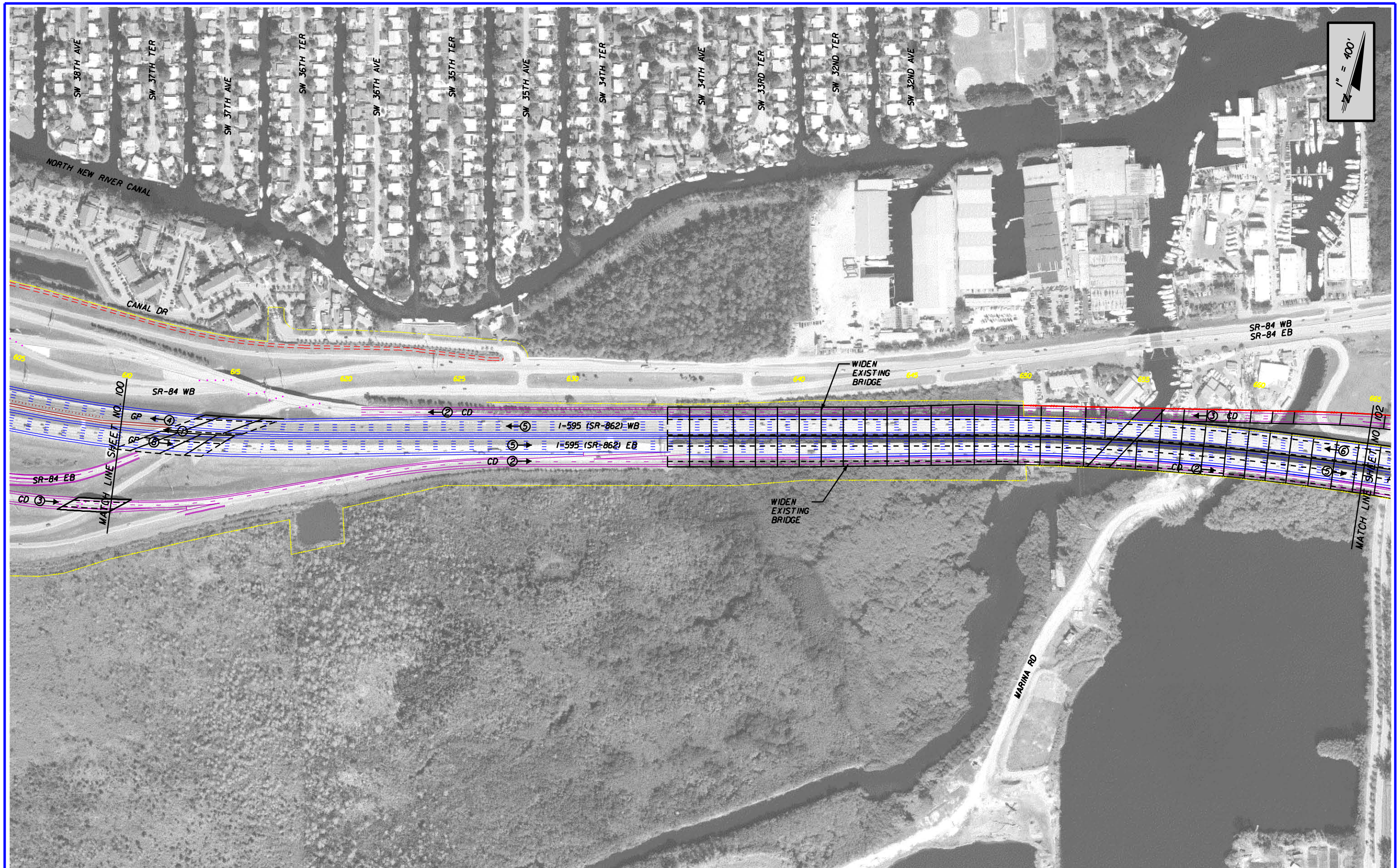

REVISIONS					
DATE	BY	DESCRIPTION	DATE	BY	DESCRIPTION

RS&H
Reynolds, Smith and Hills, Inc.
300 S. Pine Island Road, Suite 300
Plantation, Florida 33324-2619
954-474-3005
FL Cert. No. EB0005620
Phil Schwab, P.E. No. 47555

STATE OF FLORIDA
DEPARTMENT OF TRANSPORTATION

ROAD NO.	COUNTY	FINANCIAL PROJECT ID
862	BROWARD	409354-1-22-01

I-595 PD&E STUDY
ALTERNATIVE 2B PLAN

SHEET NO.
101

@USER@ 2/15/2006 7:59:58 AM x:\projects\IM453006\roadway\PE Report\plan2B11.dgn

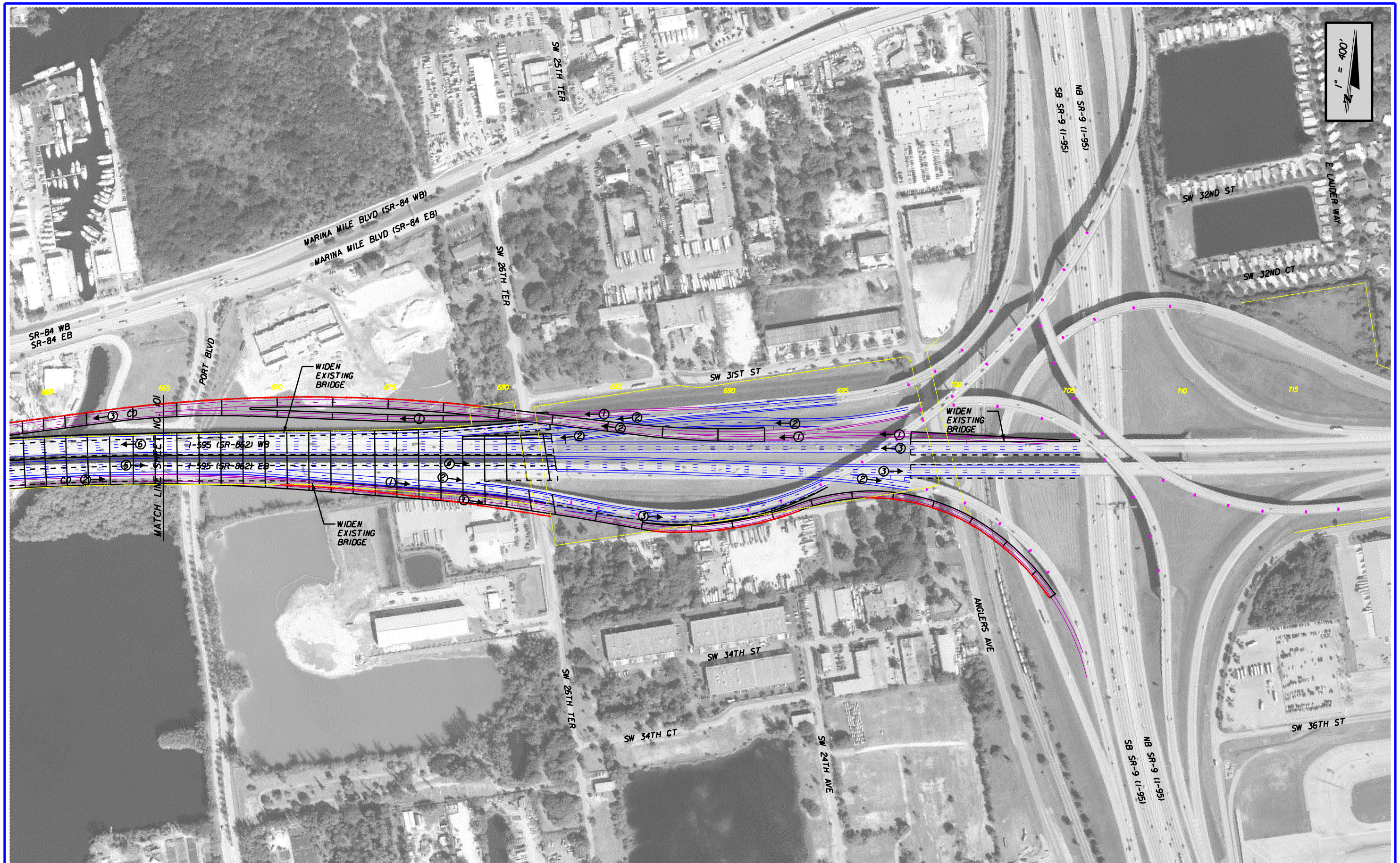

REVISIONS					
DATE	BY	DESCRIPTION	DATE	BY	DESCRIPTION

RS&H
Reynolds, Smith and Hills, Inc.
300 S. Pine Island Road, Suite 300
Plantation, Florida 33324-2619
954-474-3005
FL Cert. No. EB0005620
Phil Schwab, P.E. No. 47555

STATE OF FLORIDA
DEPARTMENT OF TRANSPORTATION

ROAD NO.	COUNTY	FINANCIAL PROJECT ID
862	BROWARD	409354-1-22-01

I-595 PD&E STUDY
ALTERNATIVE 2B PLAN

SHEET NO. 102

REVISIONS					
DATE	BY	DESCRIPTION	DATE	BY	DESCRIPTION

RS&H
Reynolds, Smith and Hills, Inc.
300 S. Pine Island Road, Suite 300
Plantation, Florida 33324-2619
954-474-3005
FL Cert. No. EB0005620
Phil Schwab, P.E. No. 47555

STATE OF FLORIDA
DEPARTMENT OF TRANSPORTATION

ROAD NO.	COUNTY	FINANCIAL PROJECT ID
862	BROWARD	409354-1-22-01

I-595 PD&E STUDY
ALTERNATIVE 2B PLAN

SHEET NO.
103

REVISIONS					
DATE	BY	DESCRIPTION	DATE	BY	DESCRIPTION

RS&H
Reynolds, Smith and Hills, Inc.
300 S. Pine Island Road, Suite 300
Plantation, Florida 33324-2619
954-474-3005
Fl. Cert. No. EB0005620
Phil Schwab, P.E. No. 47555

STATE OF FLORIDA
DEPARTMENT OF TRANSPORTATION

ROAD NO.	COUNTY	FINANCIAL PROJECT ID
862	BROWARD	409354-1-22-01

I-595 PD&E STUDY
ALTERNATIVE 2B PLAN

SHEET NO.
104

$USER$ 2/15/2006 8:00:51 AM X:\projects\IM453300-roadway-PE Report-plan2B14.dgn

REVISIONS					
DATE	BY	DESCRIPTION	DATE	BY	DESCRIPTION

RS&H
Reynolds, Smith and Hills, Inc.
300 S. Pine Island Road, Suite 300
Plantation, Florida 33324-2619
954-474-3005
FL Cert. No. EB0005620
Phil Schwab, P.E. No. 47555

STATE OF FLORIDA
DEPARTMENT OF TRANSPORTATION

ROAD NO.	COUNTY	FINANCIAL PROJECT ID
862	BROWARD	409354-1-22-01

I-595 PD&E STUDY
ALTERNATIVE 2B PLAN

SHEET NO.
105

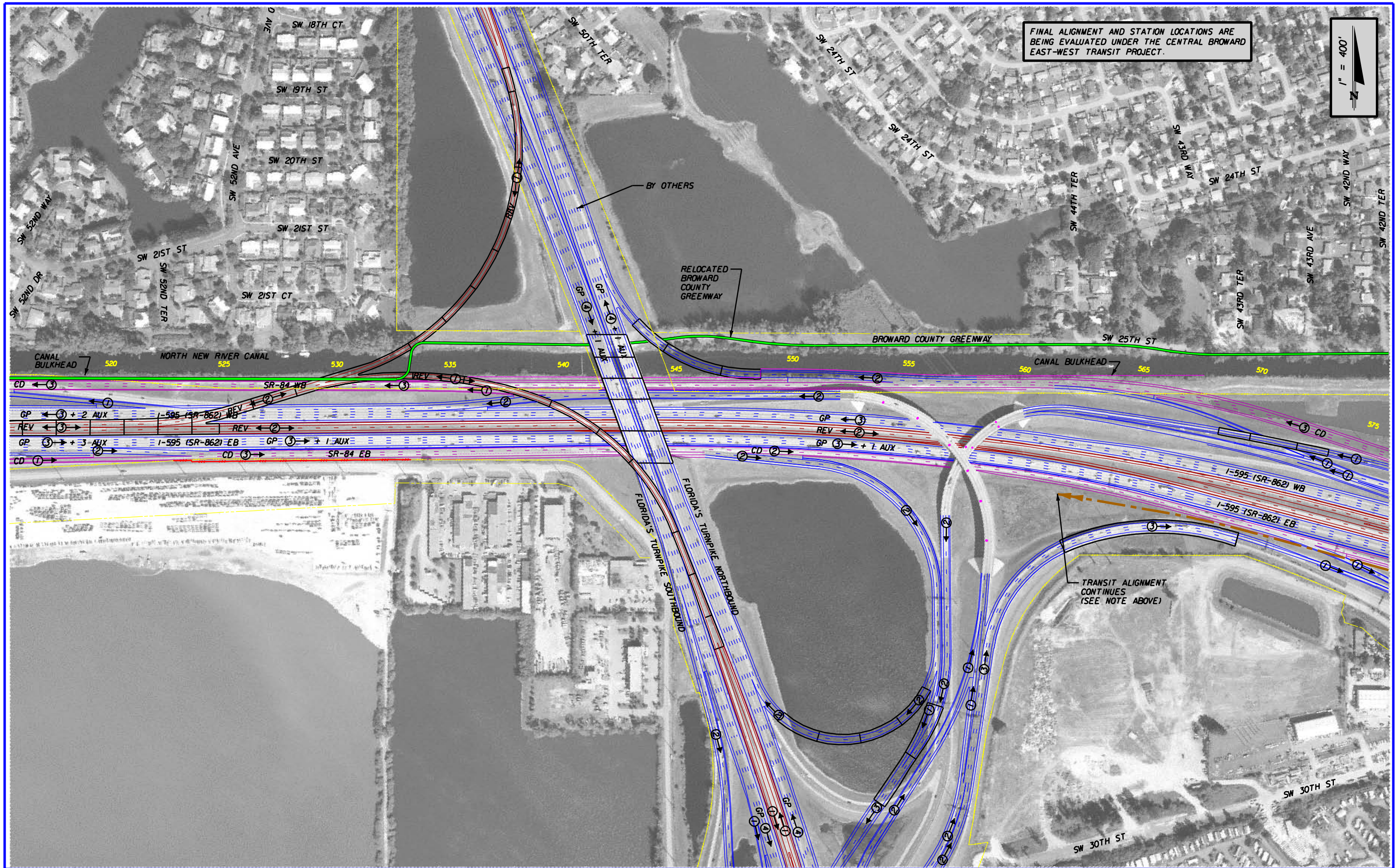

REVISIONS					
DATE	BY	DESCRIPTION	DATE	BY	DESCRIPTION

RS&H
Reynolds, Smith and Hills, Inc.
300 S. Pine Island Road, Suite 300
Plantation, Florida 33324-2619
954-474-3005
FL Cert. No. EB0005620
Phil Schwab, P.E. No. 47555

STATE OF FLORIDA
DEPARTMENT OF TRANSPORTATION

ROAD NO.	COUNTY	FINANCIAL PROJECT ID
862	BROWARD	409354-1-22-01

ALTERNATIVE 2A
TURNPIKE DIRECT CONNECT
NORTH ALIGNMENT

SHEET NO.
106

$USER$ 2/11/2006 2:28:12 PM X:\projects\11455300\roadway\PE_Report\2A_TPKCONN_NORTH.dgn

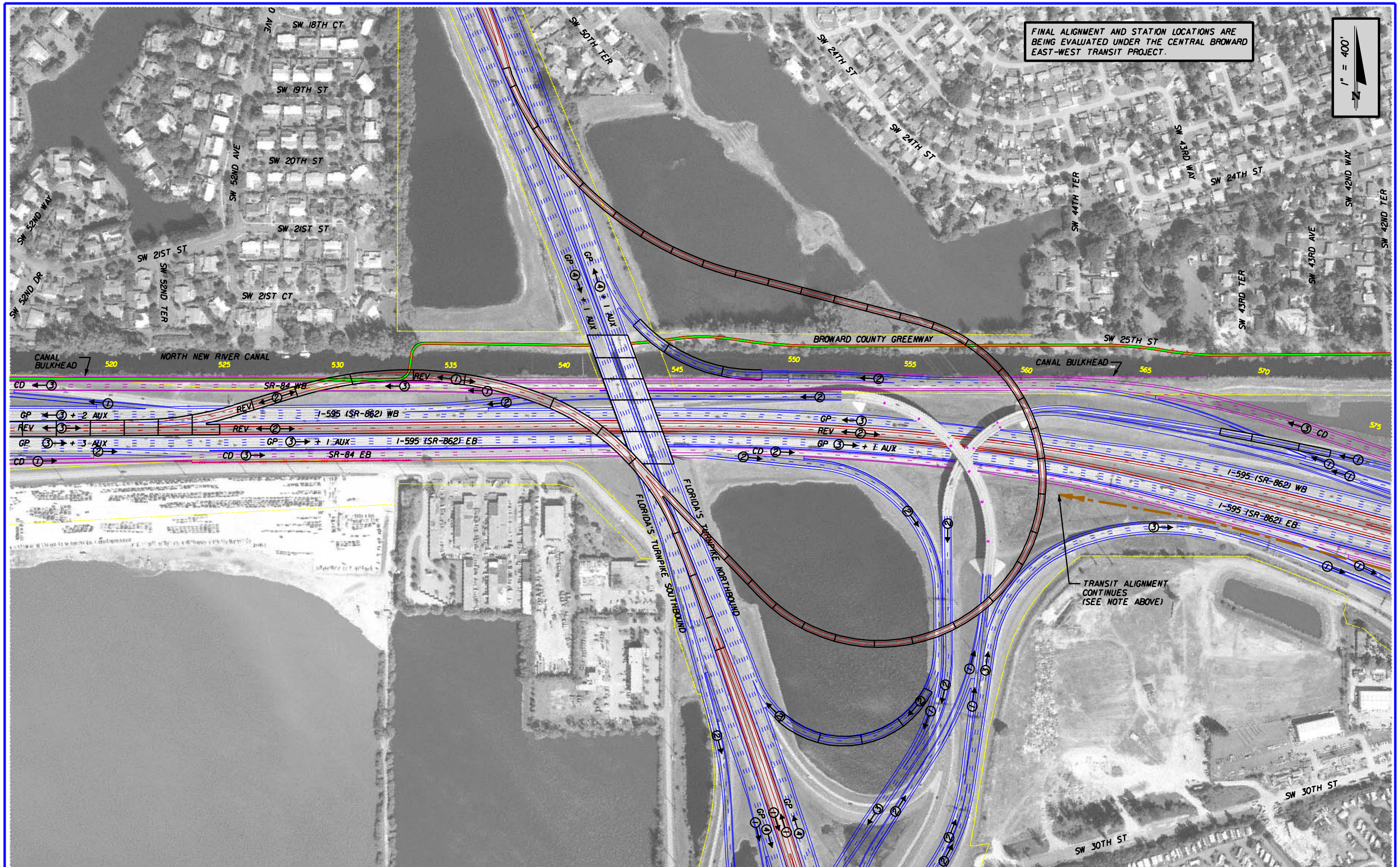

REVISIONS					
DATE	BY	DESCRIPTION	DATE	BY	DESCRIPTION

RS&H
Reynolds, Smith and Hills, Inc.
300 S. Pine Island Road, Suite 300
Plantation, Florida 33324-2619
954-474-3005
FL Cert. No. EB0005620
Phil Schwab, P.E. No. 47555

STATE OF FLORIDA
DEPARTMENT OF TRANSPORTATION

ROAD NO.	COUNTY	FINANCIAL PROJECT ID
862	BROWARD	409354-1-22-01

ALTERNATIVE 2A TURNPIKE DIRECT CONNECT CENTER ALIGNMENT

SHEET NO.
107

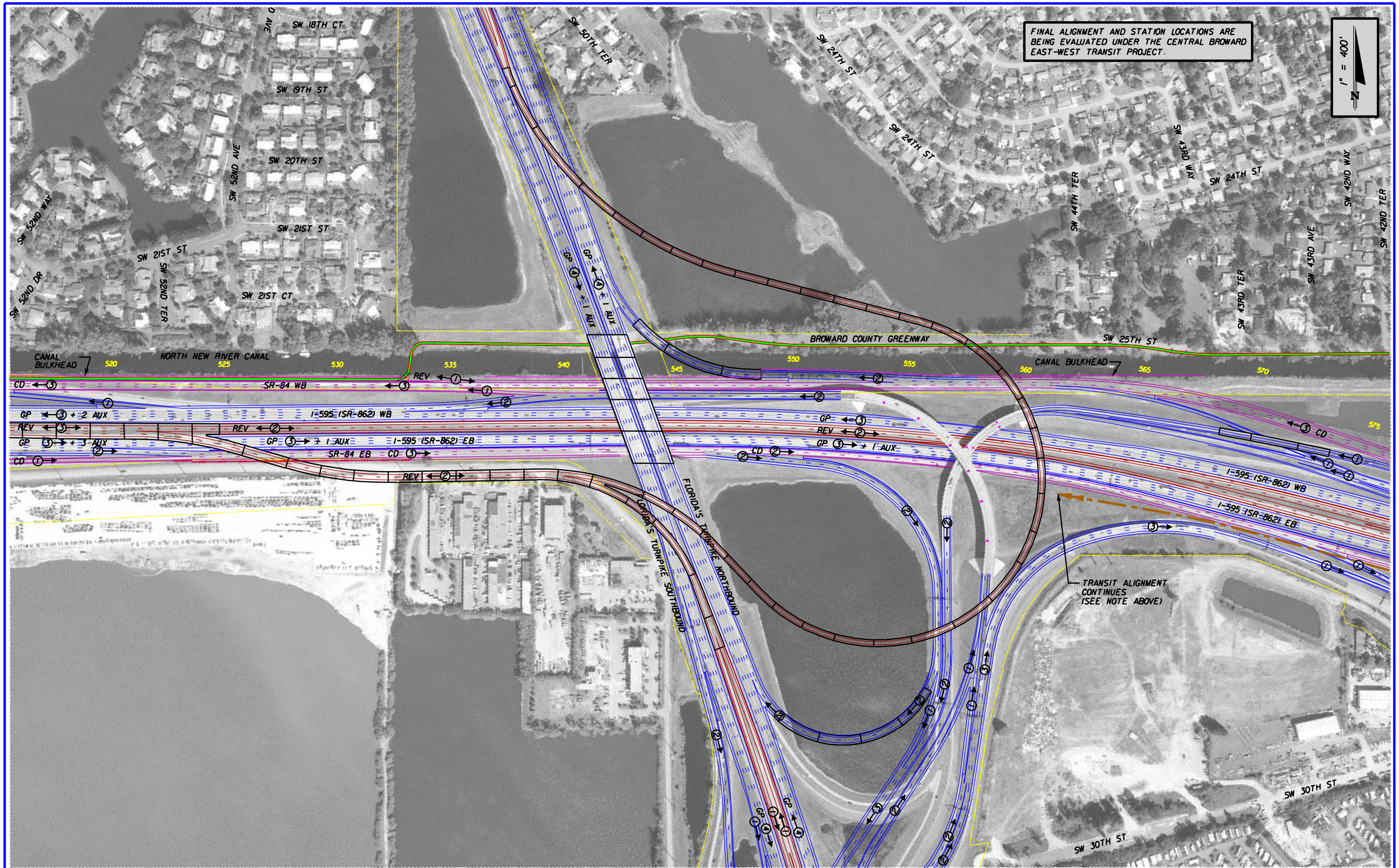

REVISIONS					
DATE	BY	DESCRIPTION	DATE	BY	DESCRIPTION

RS&H
Reynolds, Smith and Hills, Inc.
300 S. Pine Island Road, Suite 300
Plantation, Florida 33324-2619
954-474-3005
FL Cert. No. EB0005620
Phil Schwab, P.E. No. 47555

STATE OF FLORIDA
DEPARTMENT OF TRANSPORTATION

ROAD NO.	COUNTY	FINANCIAL PROJECT ID
862	BROWARD	409354-1-22-01

ALTERNATIVE 2A
TURNPIKE DIRECT CONNECT
SOUTH ALIGNMENT

SHEET NO.
108

$USER$ 2/11/2006 2:27:47 PM x:\projects\11455300\roadway\PE_Reports\2A_TPKCONN_SOUTH.dgn